RENNINGER PROPERTY
SUBDIVISION
NEW HANOVER TOWNSHIP
MONTGOMERY COUNTY, PENNSYLVANIA

APRIL 27,2012
REVISED NOVEMBER 30, 2012
REVISED MAY 6, 2013
REVISED JUNE 24, 2013
REVISED AUGUST 23, 2013
REVISED SEPTEMBER 6, 2013
REVISED AUGUST 12, 2014
REVISED NOVEMBER 9, 2015 (PHASE 'B')
REVISED JANUARY 9, 2017 (PHASE 'D')
'FINAL'

GENERAL NOTES:

1. BOUNDARY RETRACEMENT FROM A FIELD SURVEY PERFORMED BY BURSICH ASSOCIATES, INC. DATED FEBRUARY 2, 2005.
2. TOPOGRAPHIC INFORMATION SHOWN OBTAINED FROM AERIAL PHOTOGRAPHY PROVIDED BY PROMAPS, INC., DATE OF FLIGHT - FEBRUARY 11, 2005. GROUND CONTROL AND SUPPLEMENTAL TOPOGRAPHY DONE BY BURSICH ASSOCIATES, INC.
3. ELEVATIONS ARE BASED ON THE NATIONAL GEODETIC VERTICAL DATUM (NGVD) 1929.
4. BEARING BASE IS A GEODETIC BEARING.
5. SITE BENCHMARK IS INVERT OF 24" RCP AT EXISTING HEADWALL LOCATED AT NORTH END OF PROJECT AREA ON EAST SIDE OF MIDDLE CREEK ROAD. ELEV. - 266.82.
6. TAX PARCEL INFORMATION: (AS RECORDED IN THE OFFICE FOR THE RECORDING OF DEEDS, ETC. IN AND FOR THE COUNTY OF MONTGOMERY)

   TAX PARCEL NO. 47-00-06892-009
   BLOCK 41 UNIT 019
   DEED BOOK 5034, PAGE 1545

   TAX PARCEL NO. 47-00-05028-001
   BLOCK 41 UNIT 39
   DEED BOOK 5622, PAGE 2314
7. RECORD OWNER/APPLICANT:
   GAMBONE SWAMP PIKE, L.P.
   1030 W. GERMANTOWN PIKE
   P.O. BOX 287
   FAIRVIEW VILLAGE, PA. 19409

   SOURCE OF TITLE
   BEING THE SAME PREMISES GAMBONE BROTHERS. GRANTED AND CONVEYED TO GAMBONE SWAMP PIKE LP. BY DEED DATED FEBRUARY 24, 2006. RECORDED IN DEED BOOK 5593 PAGE 1004 IN THE MONTGOMERY COUNTY RECORDER OF DEEDS

   BEING THE SAME PREMISES MICHAEL F. SMITH GRANTED AND CONVEYED TO GAMBONE SWAMP PIKE LP.
8. REFERENCE PLANS:

   SUBDIVISION PLAN PREPARED BY WARREN GIFT FOR PAUL W. MOYER ENTITLED "COLONIAL MANOR SECTION C" DRAWING NO. 1848-1830, DATED JULY 13, 1977;

   SUBDIVISION PLAN PREPARED BY ASTON SURVEYORS & ENGINEERS FOR WILLIAM H. GERHART, PLAN NO. 888-1F, DATED APRIL 20, 1994, LAST REVISED JULY 15, 1994;

   SUBDIVISION PLAN PREPARED BY ASTON SURVEYORS & ENGINEERS FOR WILLIAM H. GERHART, PLAN NO. 888-2E, DATED JULY 27, 1992;

   PLAN OF SURVEY PREPARED BY URWILER & WALTER, INC. FOR GAMBONE BROTHERS DEVELOPMENT CO. DATED JANUARY 26, 1988, LAST REVISED JUNE 14, 1989;
9. THIS PLAN AND BOUNDARY WAS PREPARED WITH THE BENEFIT OF A TITLE REPORT PROVIDED BY CLIENT, PREPARED BY CENTRAL MORTGAGE ABSTRACT CO., INC., COMMITMENT NO. 30282, EFFECTIVE DATE JANUARY 21, 1993, REVISED FEBRUARY 12, 1993.
10. THE LOCATIONS OF EXISTING UNDERGROUND UTILITIES ARE SHOWN IN A APPROXIMATE WAY ONLY AND HAVE NOT BEEN INDEPENDENTLY VERIFIED BY THE OWNER OR ITS REPRESENTATIVE. THE CONTRACTOR SHALL DETERMINE THE EXACT LOCATION OF ALL EXISTING UTILITIES BEFORE COMMENCING WORK, AND AGREES TO BE FULLY RESPONSIBLE FOR ANY AND ALL DAMAGES, WHICH MIGHT BE OCCASIONED BY THE CONTRACTOR'S FAILURE TO EXACTLY LOCATE AND PRESERVE ANY AND ALL UNDERGROUND UTILITIES.
11. THIS PLAT IS REPRESENTATIVE OF EXISTING CONDITIONS FOR WHICH BURSICH ASSOCIATES, INC. WAS CONTRACTED TO PERFORM, EXCEPT ANY RECORDED OR UNRECORDED EASEMENTS WHICH MAY NOT BE VISIBLE OR SUPPLIED TO BURSICH ASSOCIATES, INC.
12. PENNSYLVANIA ONE CALL SYSTEM ACT 38 SERIAL NUMBERS FOR THIS PROJECT ARE 0145260, 0145257.
13. EXISTING LEGAL RIGHT-OF-WAY FOR SWAMP PIKE AND MIDDLE CREEK ROAD ESTABLISHED BY DEED OF RECORDS.
14. WETLANDS AND WATERS OF THE UNITED STATES HEREON WERE DELINEATED AND VERIFIED BY DEL VAL SOILS & ENVIRONMENTAL CONSULTANTS, INC. IN APRIL, 2005. FLAGGING WAS FIELD LOCATED BY BURSICH ASSOCIATES, INC.
15. THE SITE IS NOT LOCATED WITHIN THE 100 YEAR FLOODPLAIN, IDENTIFIED AS ZONE A, PER THE FEMA FLOOD INSURANCE RATE MAP NO. 42029C0090 D, EFFECTIVE DATE 11/20/96.
16. THE PROJECT IS PROPOSED TO BE SERVICED BY PUBLIC SEWER AND PUBLIC WATER FACILITIES.
17. ALL LANDS BETWEEN THE TITLE LINE OR LEGAL RIGHT-OF-WAY AND THE ULTIMATE RIGHT-OF-WAY FOR SWAMP PIKE AND MIDDLE CREEK ROAD, AS WELL AS PROPOSED ROAD 'D' ARE OFFERED FOR DEDICATION TO THE AGENCY HAVING JURISDICTION OF THE ROADS AT THE TIME OF DEDICATION. THE HOMEOWNERS ASSOCIATION AND/OR COMMERCIAL PROPERTY OWNER(S) WILL BE RESPONSIBLE TO MAINTAIN THE REMAINING PROPOSED ROADWAYS AND PARKING AREAS
18. PERMANENT CONCRETE MONUMENTS SHALL BE PLACED AT ALL CORNERS OF THE ORIGINAL TRACT, AND ALONG STREET RIGHT-OF-WAY LINES AS INDICATED ON THE PLAN BY THE SYMBOL " ▩ ". ALL OTHER PROPERTY & LOT CORNERS SHALL BE PERMANENTLY MARKED WITH SOLID STEEL PINS OF AT LEAST 3/4" DIAMETER AND A MINIMUM LENGTH OF 30 INCHES. CONCRETE MONUMENTS SHALL BE 24" LONG AND 4" SQUARE WITH A STEEL REINFORCING BAR. WHERE MONUMENTS FALL WITHIN A DRIVEWAY OR OTHER PAVED AREA, "P.K." NAILS SHALL BE USED TO MARK THE CORNERS. MONUMENTS AND LOT PINS WILL BE PLACED AFTER COMPLETION OF FINAL GRADING ACTIVITY.
19. ALL NEW UTILITY SERVICES SHALL BE UNDERGROUND.
20. THE TOWNSHIP SHALL BE RESPONSIBLE FOR MAINTAINING STORM DRAINAGE INLETS, MANHOLES, & PIPING WITHIN ROAD RIGHTS-OF-WAY AFTER DEDICATION OF THE ROADS IF ACCEPTED BY THE TOWNSHIP. THE HOMEOWNERS ASSOCIATION AND/OR COMMERCIAL PROPERTY OWNER(S) WILL BE RESPONSIBLE TO MAINTAIN STORM DRANAGE FACILITIES LOCATED ON THEIR RESPECTIVE LANDS AND DETENTION BASINS.
21. THE RETENTION/DETENTION BASINS AND STORMWATER FACILITIES (AS SHOWN IN THIS PLAN) ARE A BASIC AND PERPETUAL PART OF THE STORM DRAINAGE SYSTEM OF THE TOWNSHIP OF NEW HANOVER, AND AS SUCH ARE TO BE PROTECTED AND PRESERVED, IN ACCORDANCE WITH THE APPROVED FINAL PLAN, BY THE HOMEOWNERS ASSOCIATION. THE TOWNSHIP OF NEW HANOVER AND/OR ITS AGENTS RESERVES THE RIGHT AND PRIVILEGE TO ENTER UPON SUCH LANDS FROM TIME TO TIME FOR THE PURPOSE OF INSPECTION OF SAID RETENTION/DETENTION BASIN(S) IN ORDER TO DETERMINE THAT THE STRUCTURAL AND DESIGN INTEGRITY ARE BEING MAINTAINED BY THE ASSOCIATION. IN THE EVENT THAT MAINTENANCE AND STRUCTURAL INTEGRITY ARE NOT MAINTAINED BY THE ASSOCIATION AS REQUIRED BY THE TOWNSHIP, THE ASSOCIATION HEREBY GRANTS TO THE TOWNSHIP THE RIGHT TO ENTER UPON SUCH PROPERTY AND TO PERFORM ANY AND ALL IMPROVEMENTS, REVISIONS OR MAINTENANCE AS MAY BE DETERMINED NECESSARY BY THE TOWNSHIP AND TO RECOVER THE COSTS THEREOF FROM THE ASSOCIATION BY ALL LAWFUL MEANS INCLUDING, BUT NOT LIMITED TO, THE IMPOSITION OF A MUNICIPAL LIEN ON THE SUBJECT PROPERTY. A BLANKET EASEMENT IN FAVOR OF NEW HANOVER TOWNSHIP SHALL BE PROVIDED OVER ALL OPEN SPACE AREAS FOR THIS PURPOSE.
22. THE DEVELOPER, ITS SUCCESSORS OR ASSIGNS, HEREBY RESERVES THE RIGHT TO ENTER UPON EACH AND EVERY LOT AND AREA OF THE SUBDIVISION/ DEVELOPMENT DEPICTED HEREON. UNTIL EXPIRATION OF THE STATUTORY MAINTENANCE PERIOD FOLLOWING DEDICATION OF PUBLIC IMPROVEMENTS SET FORTH IN SECTION 509 OF THE PENNSYLVANIA MUNICIPALITIES PLANNING CODE, AS AMENDED, 53 P.S. 10509, FOR THE PURPOSE OF COMPLETING ANY LANDSCAPING AS REQUIRED THE MUNICIPALITY AND FURTHER, TO MAKE SUCH MODIFICATIONS ON ANY LOT AS MAY BE NECESSARY IN THE DISCRETION OF THE DEVELOPER, ITS SUCCESSORS OR ASSIGNS, AND OR THE MUNICIPAL ENGINEER FOR SATISFACTORY STORM WATER MANAGEMENT. SITE GRADING MAY WARRANT CONSTRUCTION OF RETAINING WALLS OR RETAINING STRUCTURES TO PROVIDE FOR PROPER SUPPORT AND/OR DRAINAGE FOR CERTAIN LOTS, EITHER TO THE USE AND BENEFIT OF THE LOT ON WHICH SAME MAY BE SITUATED, OR TO THE USE AND BENEFIT OF AN ADJOINING LOT OR LOTS. DEVELOPER RESERVES SOLE DISCRETION WITH REGARDS TO ERECTION OF SAME PRIOR TO SETTLEMENT ON ANY INDIVIDUAL LOT. APPROVAL BY THE TOWNSHIP ENGINEER WILL BE OBTAINED FOR ALL RETAINING WALLS PRIOR TO INSTALLATION. SUCH RETAINING WALLS OR RETAINING STRUCTURES SHALL NOT BE REMOVED OR ALTERED BY THE PURCHASER OR SUCCESSORS AND ASSIGNS, BUT SHALL REMAIN IN PLACE AND SHALL BE PROPERLY MAINTAINED BY THE OWNER OF THE LOT ON WHICH ERECTED.
23. TRASH COLLECTION SHALL BE CURBSIDE PICKUP AS DISPOSED BY EACH HOMEOWNER. ALL TRASH TO BE COLLECTED BY A PRIVATE COLLECTION SERVICE. SOILD WASTE DISPOSAL GENERATED FROM SINGLE FAMILY DWELLING LOTS WILL BE PROVIDED BY INDIVIDUAL PROPERTY OWNERS.
24. WITHIN CLEAR SIGHT TRIANGLES FOR ALL PUBLIC STREETS, NO VISION-OBSTRUCTING OBJECT SHALL BE PERMITTED WHICH OBSCURES VISION ABOVE THE HEIGHT OF THIRTY (30) INCHES AND BELOW THE HEIGHT OF TEN (10) FEET, MEASURED FROM THE CENTER LINE GRADE OF INTERSECTING STREETS.
25. THE DWELLINGS AND DRIVEWAYS SHOWN ON THESE PLANS ARE APPROXIMATE IN SIZE AND LOCATION AND ARE SUBJECT TO ALL TOWNSHIP ZONING AND SUBDIVISION ORDINANCE REQUIREMENTS. FINAL DWELLING SIZE AND LOCATION WILL BE ESTABLISHED AT THE TIME OF BUILDING PERMIT APPLICATION.
26. ALL SANITARY SEWERS SHALL BE CONSTRUCTED IN ACCORDANCE WITH NEW HANOVER TOWNSHIP AUTHORITY'S STANDARD SPECIFICATIONS FOR SANITARY SEWER CONSTRUCTION.
27. ALL SANITARY SEWER MAINS AND WATERLINES LOCATED WITHIN PROPOSED RIGHT-OF-WAYS AND EASEMENTS SHALL BE DEDICATED TO THE APPROPRIATE AGENCY OR AUTHORITY.
28. ALL WATERLINES SHALL BE CONSTRUCTED IN ACCORDANCE WITH SUPERIOR WATER COMPANY'S SPECIFICATIONS AND REQUIREMENTS.
29. HANDICAP RAMPS SHALL BE PROVIDED AT ALL INTERSECTIONS OF SIDEWALKS & BIKE PATHS AT ROADWAYS.
30. OPEN SPACE LAND MAY NOT BE SEPARATELY SOLD, OR FURTHER DEVELOPED OR SUBDIVIDED.
31. ALL DEVELOPMENT ACTIVITIES, SUCH AS CLEARING, GRADING, REGRADING, DRIVEWAYS, ROADS, BUILDINGS, SEPTIC SYSTEMS, RETENTION/DETENTION BASINS AND UTILITY EASEMENTS SHALL BE LIMITED TO THE NATURAL RESOURCE PROTECTION STANDARDS AS SPECIFIED IN THE NEW HANOVER TOWNSHIP ZONING ORDINANCE [CHAPTER 27] AS LAST AMENDED. THE REMAINING RESOURCES SHALL REMAIN IN ITS NATURAL CONDITION, INCLUDING THE NATURAL FOREST GROUND COVER. THIS RESTRICTION SHALL RUN WITH THE LAND AND BE BINDING ON THE PRESENT AND ALL FUTURE OWNERS AND/OR LESSEES.
32. NO STRUCTURES ARE ALLOWED WITHIN THE AREA OF THE BUFFER YARDS, INCLUDING FENCES, POOLS, SHEDS, ETC.
33. ALL OPEN SPACE PARCELS ARE TO BE OWNED AND MAINTAINED BY A HOMEOWNERS ASSOCIATION.
34. STREET NAME SIGNS AND TRAFFIC CONTROL SIGNS SHALL BE CONSISTENT IN DESIGN AND SPECIFICATIONS WITH THOSE IN GENERAL USE BY THE TOWNSHIP. SIGN TYPES, LOCATIONS AND INSTALLATION SHALL BE SUBJECT TO THE DETERMINATION, APPROVAL AND INSPECTION OF THE TOWNSHIP ENGINEER AND INSTALLED AT THE COST OF THE DEVELOPER. THE STREET NAME SIGNS SHALL BE INSTALLED AT TIME OF THE COMPLETION OF THE ROAD BINDER COURSE OR AT THE ISSUANCE OF THE FIRST OCCUPANCY PERMIT, WHICHEVER OCCURS FIRST.
35. PLANS WILL NOT BE RECORDED AND NO PERMIT SHALL BE ISSUED FOR ANY INDIVIDUAL BUILDING LOT OR LOTS OR SITE IMPROVEMENTS UNTIL DEVELOPMENT AGREEMENTS, INCLUDING A STORMWATER MANAGEMENT OPERATIONS AND MAINTENANCE AGREEMENT, WITH NEW HANOVER TOWNSHIP HAS BEEN DULY EXECUTED.
36. AN OCCUPANCY PERMIT MUST BE OBTAINED FROM MONTGOMERY COUNTY PRIOR TO THE START OF ANY WORK WITHIN THE SWAMP PIKE RIGHT-OF-WAY.
37. NO TOPSOIL SHALL BE REMOVED FROM THE SITE.
38. THE DEVELOPER SHALL BE RESPONSIBLE FOR ALL CHARGES OR RATES FOR THE ADEQUATE WATER SUPPLY TO EACH FIRE HYDRANT WITHIN THE SUBDIVISION UNTIL SUCH TIME AS THE STREETS ARE ACCEPTED OR CONDEMNED AS PUBLIC STREETS BY THE BOARD OF SUPERVISORS.
39. THE DEVELOPER SHALL BE RESPONSIBLE FOR ALL CHARGES OR RATES OF THE STREET LIGHTS UNTIL SUCH TIME THAT THE STREETS ARE ACCEPTED OR CONDEMNED AS PUBLIC STREETS BY THE BOARD OF SUPERVISORS. PROVISIONS SHALL BE MADE FOR ENERGIZING SAID LIGHTING WHEN 50 PERCENT OF THE DWELLINGS HAVE BEEN OCCUPIED. ALL STREET AND PARKING LOT LIGHTING SHALL BE OWNED AND MAINTAINED BY THE HOMEOWNERS ASSOCIATION.
40. ROOF DRAINS AND SUMP PUMPS SHALL NOT DISCHARGE WATER ONTO THE SIDEWALK OR STREET.
41. ROAD "D" SHALL TIE INTO PETER LANE WHEN THE PROPERTY IS DEVELOPED IN THE FUTURE.
42. ALL STREET SIGNS SHALL BE INSTALLED PRIOR TO REQUESTING THE FIRST USE AND OCCUPANCY PERMIT.
43. ALL SIDEWALKS AND BIKEWAYS SHOULD BE GRADED AND INSTALLED PRIOR TO REQUESTING THE FIRST USE AND OCCUPANCY PERMIT.
44. A POLE LAMP SHALL BE INSTALLED ON EACH LOT AT THE DRIVEWAY LOCATION, 5' BEHIND THE ULTIMATE RIGHT-OF-WAY LINE. THE INSTALLATION OF THE LAMP IS TO MEET THE SATISFACTION OF THE TOWNSHIP ENGINEER. DETAILS OF THE PROPOSED LAMP SHALL BE PROVIDED TO THE TOWNSHIP FOR REVIEW AND APPROVAL PRIOR TO INSTALLATION.
45. ALL SIDEWALK, BIKE TRAIL, & ROADWAY IMPROVEMENTS ALONG SWAMP PIKE MUST BE COORDINATED WITH THE IMPROVEMENTS PROPOSED FOR THE WYNSTONE DEVELOPMENT. THE ROADWAY, BIKE TRAIL & SIDEWALK IMPROVEMENTS ALONG PETER LANE MUST BE COORDINATED WITH THE COUNTRY MEADOWS SUBDIVISION PLAN.
46. ALL FIRE HYDRANTS SHALL HAVE THE FOLLOWING CONNECTIONS, HYDRANT MARKINGS, AND CURB MARKINGS:
    - THE CURBING IN FRONT OF THE HYDRANT SHALL BE PAINTED TRAFFIC YELLOW A TOTAL OF 30 FT. WITH THE HYDRANT LOCATED IN THE CENTER OF THE 30 FT.
    - THE MAIN STEAMER CONNECTION BASE SHALL BE 18"-24" OFF OF FINISHED GRADE AT IT'S PLACEMENT. BELOW THE TWO AND HALF OUTLET PORTS SHALL HAVE A 3-INCH REFLECTIVE NUMBER THAT COORDINATES WITH THE WATER MAIN DIAMETER PLACED ON THE BARREL OF THE HYDRANT.
    - ALL HYDRANT CONNECTIONS SHALL HAVE A 5-INCH STORZ CONNECTOR ON THE MAIN STEAMER FITTING AND NST THREAD ON THE TWO AND HALF OUTLET.
47. WHERE BUFFER AREA PLANTINGS ARE LOCATED ON PRIVATE LOTS, DEED RESTRICTIONS SHALL BE PROVIDED TO PROHIBIT THE REMOVAL OF SUCH PLANTINGS AND GUARANTEE REPLACEMENT OF ANY LOST PLANTS, AND ALSO RESTRICT THE PLACEMENT OF SHEDS & STRUCTURES WITHIN THE BUFFER AREAS.
48. PRIOR TO CONSTRUCTION, THE EXISTING HOMEOWNER MUST BE CONTACTED TO DETERMINE WHERE THE SANITARY SEWER LATERAL SHOULD BE LOCATED.
49. THE HOMEOWNERS ASSOCIATION SHALL BE RESPONSIBLE FOR THE MAINTANCE OF ADJACENT PARKING LOTS IN OPEN SPACE AREAS.
50. A TOWNSHIP DRIVEWAY PERMIT MUST BE OBTAINED FOR ALL DRIVEWAYS AT THE TIME OF THE BUILDING PERMIT APPLICATION.
51. THE TOWNSHIP HAS THE RIGHT TO ENTER THE SITE FOR AS-BUILT LIGHTING MEASUREMENTS, AND MAY REQUIRE ADDITIONAL SHIELDING AND/OR LANDSCAPING TO SHIELD ADJACENT PROPOERTIES FROM GLARE OR LIGHT TRESSPASS.
52. DESIGN CALCULATIONS AND STRUCTURAL DETAILS FOR ALL RETAINING WALLS SHALL BE SUBMITTED TO THE TWP. ENGINEER FOR REVIEW AT LEAST 30 DAYS PRIOR TO THE PRE CONSTRUCTION MEETING.
53. LOTS 99, 104-111 CONTAIN A BUFFER YARD WITHIN THEIR BOUNDARIES. THESE AREAS SHALL BE DEED RESTRICTED, SUBJECT TO THE BUFFER YARD RESTRICTIONS OF THE TOWNSHIP ORDINANCES.
54. LOTS 16 & 17 CONTAIN WATER LINE EASEMENT WITHIN THEIR BOUNDARIES. THESE AREAS SHALL BE DEED RESTRICTED, SUBJECT TO EASEMENT RESTRICTIONS OF THE TOWNSHIP ORDINANCES.
55. THE PROPOSED PERMANENT POOL BASINS SHALL BE AERATED. SHOP DRAWINGS OF THE AERATION SYSTEM SHALL BE SUBMITTED FOR REVIEW AND APPROVAL.
56. A FEE-IN-LIEU OF RECREATION FACILITIES IS OFFERED TO NEW HANOVER TOWNSHIP.
57. THE GENERAL LAYOUT AND DESIGN OF THE NON-RESIDENTIAL LOT WILL COMPLY WITH APPLICABLE NON-RESIDENTIAL SIZE, FLOOR AREA RATIO AND DESIGN STANDARDS.

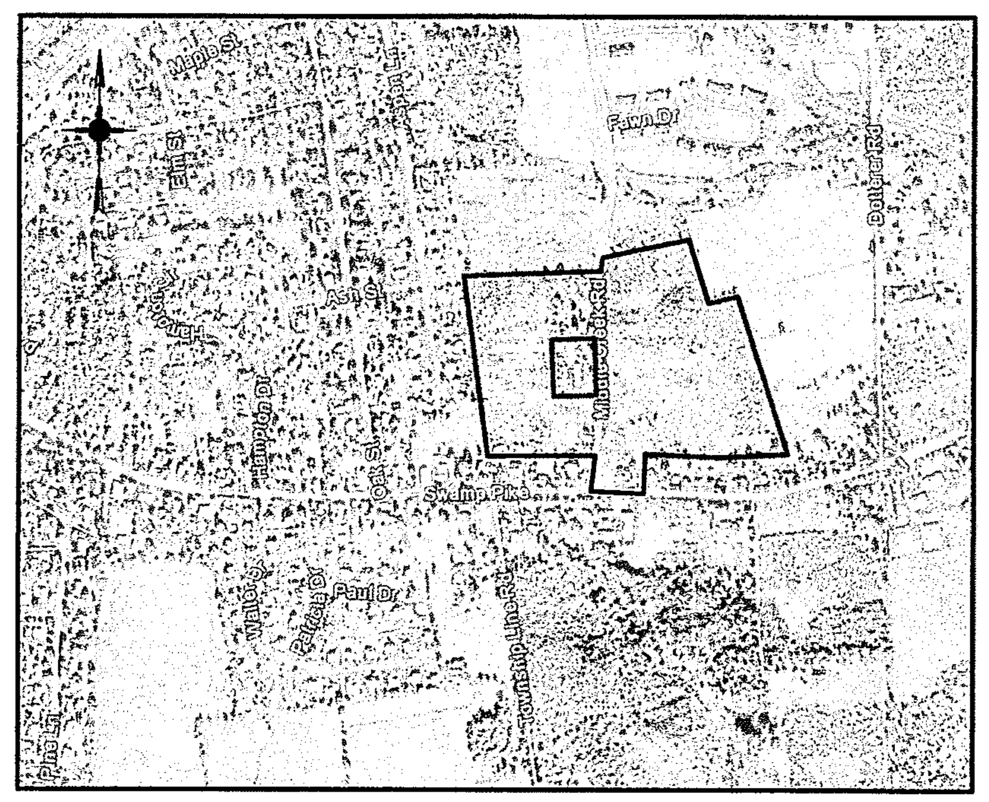

LOCATION MAP
SCALE: 1"= 800'

WAIVERS:

WAIVERS FROM THE FOLLOWING SECTION(S) OF THE NEW HANOVER TOWNSHIP SUBDIVISION & LAND DEVELOPMENT ORDINANCE WERE GRANTED BY THE BOARD OF SUPERVISORS ON 3/11/13:

1. SECTION 22-503.C.(4) - FROM EXISTING BUILDINGS AND USES WITHIN 200 FEET OF THE SITE. WE HAVE ADDED AN AERIAL PHOTOGRAPH OF THE SITE AND THE SURROUNDING AREA TO THE PLAN SET IN ACCORDANCE WITH THE RECOMMENDATION OF THE TOWNSHIP ENGINEER.
2. SECTION 22-803.1 - TO ALLOW FOR CALCULATING THE MINIMUM LOT AREAS EXCLUSIVE OF ALL EASEMENTS. THIS IS NECESSARY FOR THE DRAINAGE IN THE REAR LOTS OF LOT 39 THROUGH 48.
3. SECTION 22-805.3 - TO ALLOW GRADING WITH IN FIVE FEET (5') OF THE PROPERTY LINE. THE PROJECT REQUIRES GRADING UP TO THE PROPERTY LINE IN ORDER TO CONNECT ROAD "D" TO THE ADJOINING COUNTRY MEADOWS SUBDIVISION. ALSO, GRADING IS REQUIRED ALONG THE RIGHT-OF-WAY OF MIDDLE CREEK ROAD AT THE INTERSECTION OF SWAMP PIKE AND MIDDLE CREEK ROAD TO SUPPORT THE REQUIRED ROAD WIDENING.
4. SECTION 22-806.3.C(1) - FROM THE USE OF SCS METHOD FOR STORMWATER. THE SMALL DRAINAGE AREAS CONTROLLED BY EACH OF THE BASINS FALL WITHIN THE STANDARD DESIGN CRITERIA FOR THE RATIONAL METHOD.
5. SECTION 22-806.5.G - TO ALLOW A 3:1 SLOPE FOR BASIN 1A INSTEAD OF THE MAXIMUM OF 4:1 SLOPES. THIS IS DUE TO CONSTRAINTS OF THE FLOOD PLAIN AND WETLANDS BOUNDARIES.
6. SECTION 22-809A.B(1) - FROM SIDEWALK ALONG THE WESTERLY SIDE OF MIDDLE CREEK ROAD. A SIGNIFICANT PORTION OF THE RIGHT-OF-WAY ALONG THE WESTERLY SIDE OF MIDDLE CREEK ROAD IS NOT PART OF THE SUBDIVISION, AND DOES NOT HAVE SUFFICIENT WIDTH FOR THE CONSTRUCTION OF SIDEWALK. A BIKE PATH AND SIDEWALK IS PROVIDED ALONG THE ENTIRE LENGTH OF THE EASTERLY SIDE OF MIDDLE CREEK ROAD.
7. SECTION 22-809A.C(1) - FROM A FIVE FOOT (5') GRASS STRIP BETWEEN THE CURB AND SIDEWALK. THE REQUEST IS TO PROVIDE A THREE FOOT, FOUR INCH (3'-4") GRASS STRIP BETWEEN THE CURB AND SIDEWALK SO THAT THE SIDEWALK IS LOCATED WITHIN THE PROPOSED RIGHT-OF-WAY.
8. SECTION 22-813.6.G.(3) - TO ALLOW THE MINIMUM CENTERLINE HORIZONTAL CURVE, FOR A RESIDENTIAL ACCESS STREET BE REDUCED FROM 100 FEET. CONTINGENT UPON VERIFICATION THAT TRUCKS AND EMERGENCY SERIVES VEHICLES CAN SAFELY NAVIGATE THE CURVES.
9. SECTION 22-813.6.G.(6) - FROM PROVIDING A MAXIMUM 4% GRADE WITHIN 50 FEET OF THE ULTIMATE RIGHT OF WAY ALONG MIDDLE CREEK ROAD AT IT'S INTERSECTIONS WITH ALL PROPOSED DEVELOPMENT ROADS. THE EXISTING ALIGNMENT AND GRADES OF MIDDLE CREEK ROAD REQUIRE A MODIFICATION TO THIS REQUIREMENT.
10. SECTION 22-817.1.D - TO ALLOW THE DRIVEWAYS FOR VILLAGE DWELLINGS TO BE LOCATED CLOSER THAN 5' TO THE SIDE PROPERTY LINES. SINCE THE DWELLINGS ARE LOCATED 3.75' FROM THE SIDE PROPERTY LINE IN CONFORMANCE WITH THE PERMITTED SIDE YARD SETBACK FOR VILLAGE LOTS.
11. SECTION 22-818.4 - TO ALLOW ROAD "D" TO INTERSECT WITH MIDDLE CREEK ROAD AT AN ANGLE OF LESS THAN 90 DEGREES FOR A MINIMUM OF 50 FEET BEYOND THE INTERSECTION OF THE RIGHT OF WAY LINES. THE INTERSECTION ANGLE PROPOSED IS 85 DEGREES WHICH MEETS ACCEPTED PENNDOT DESIGN CRITERIA.
12. SECTION 22-823.5.G - FROM PROVIDING A MINIMUM SEPARATION OF 15' BETWEEN PARKING AREAS AND BUILDINGS. THE DWELLING ON LOT 59 AND ADJACENT PARKING AREA ARE APPROXIMATELY FOURTEEN FEET (14').
13. SECTION 22-823.5.K - FOR PARKING AREA SETBACK FROM FUTURE RIGHT-OF-WAY AND ALL PROPERTY LINES AT LEAST TEN FEET (10'). THE VISITOR/OVERFLOW PARKING AREAS ARE LOCATED CLOSE TO THE ROADWAY FOR VISIBILITY.
14. SECTION 22-829 - TO ALLOW FOR REDUCTIONS IN THE BUFFER YARDS.
15. SECTION 22-834.3.A.(1) - FROM THE EDGE OF BIKEPATH TO BE LESS THAN FOUR FEET (4') FROM THE FACE OF CURB. THE BIKE PATH DESIGN IS ALONG THE CURB OR AT ONE FOOT, FOUR INCHES (1'-4") FROM THE CURB, SO THAT IT IS LOCATED IN THE PROPOSED RIGHT-OF-WAY.
16. SECTION 22-823.5.T.6 - FROM MAINTAINING A MINIMUM LIGHTING LEVEL OF 1.0 FOOT CANDLES IN A PARKING LOT OF A PERFORMANCE STANDARD DEVELOPMENT. ALL PARKING AREAS ARE LIT WITH CUT-OFF FIXTURES. THE LAYOUT AS PROPOSED HAS MUCH MORE LIGHTING THAN ADJACENT COMMUNITIES, THEREFORE, ADDITIONAL LIGHTING WOULD HAVE A NEGATIVE IMPACT ON THE COMMUNITY.

ZONING DATA:
TN - TRADITIONAL NEIGHBORHOOD
PROPOSED USE: MIXED USE DEVELOPMENT PERMITTED BY-RIGHT WITH PUBLIC SEWER AND WATER
STANDARDS USED 27-804B.:

	REQUIRED	EXISTING	PROVIDED
TRACT AREA	OVERALL GROSS =	1,466,049 S.F./ 33.66 AC.	GROSS AREA = 1,466,049 S.F. / 33.66 AC.
	(NET.) NON-RESIDENTIAL AREA =	71,402 S.F. / 1.64 AC.	
	(GROSS) RESIDENTIAL AREA =	1,394,647 S.F./ 32.02 AC.	
	EXISTING ROAD ULTIMATE RIGHT OF WAY AREA =	66,483 S.F./ 1.53 AC.	
	RESIDENTIAL AREA (FOR DENSITY PURPOSES) =	1,328,164 S.F./ 30.49 AC.	
DENSITY (MAX.)	4 DU/ RESIDENTIAL AC. 28.8 AC. x 4 = 115 UNITS		115 UNITS
OPEN SPACE / RECREATION AREA (MIN.)	35% OF THE GROSS AREA OF THE MIXED USE DEVELOPMENT AREA		11.24 AC./ 32.13 AC. = 35%
NONRESIDENTIAL AREA	5% MIN. - 15% MAX. OF THE GROSS AREA OF THE MIXED USE DEVELOPMENT		1.64 AC. / 32.13 AC. = 5%
RESIDENTIAL AREA	50% MIN. - 60% MAX. OF THE GROSS AREA OF THE MIXED USE DEVELOPMENT		19.24 AC./ 32.13 AC. = 60%
RESIDENTIAL MIX REQUIREMENTS	LOTS OF 15 AC. OR MORE, THE DEVELOPMENT SHALL INCLUDE AT LEAST THREE OF THE RESIDENTIAL USES PERMITTED BY THIS ORDINANCE. TO QUALIFY AS AN ADEQUATE MIX, A SINGLE HOUSING TYPE MUST COMPRISE AT LEAST 15% OF THE TOTAL HOUSING UNITS IN THE DEVELOPMENT BUT SHALL NOT EXCEED 50% OF THE TOTAL NUMBER OF HOUSING UNITS IN THE DEVELOPMENT.		35 VILLAGE HOUSES / 115 OVERALL HOUSES = 30% 40 TWINS / 115 OVERALL HOUSES = 35% 40 ATRIUM HOUSES / 115 OVERALL HOUSES = 35%

B2 - VILLAGE HOUSE
LOTS 1-35

	REQUIRED	ALLOWED	PROVIDED
LOT AREA MIN.	6,000 S.F.	4,500 S.F.***	4,500 S.F.
FRONT YARD (FROM R.O.W.)			
MIN.(HOUSE)	15'	0'	0'
MIN.(GARAGE)	25'	0'	19'
MAXIMUM	N/A	20'	20'
SIDE YARD MIN.	5'	3.75'***	3.75'
REAR YARD MIN.	30'	22.50'***	22.5'
LOT WIDTH MIN.	50'	30'*	50'
BLDG. HEIGHT MAX.	N/A	40'	35'
BUILDING COVERAGE MAX.	35%	N/A	35%
IMPERVIOUS COVERAGE MAX.	N/A	See Below**	

* AS PER SECTION 27-805B(4).1, 60% OF THE REQUIREMENT OF THE PERMITTED USE.
** AS PER SECTION 27-805B(4).1, THE AREA COVERED BY IMPERVIOUS SURFACES (i.e., area covered by buildings and pavement) SHALL BE MINIMIZED TO THE GREATEST EXTENT PRACTICABLE; BEST PRACTICES FOR SURFACE WATER MANAGEMENT SHALL BE REQUIRED.
*** AS PER SECTION 27-805B(4).1, 75% OF THE REQUIREMENT OF THE PERMITTED USE.

EACH HOUSE MUST HAVE TWO OR MORE OF THE FOLLOW:
(I) AN UNENCLOSED PORCH, RUNNING ACROSS AT LEAST .75 OF THE HOUSE FRONT, BEING AT LEAST 7 FEET IN WIDTH.
(II) A FRONT YARD RAISED ABOVE SIDEWALK GRADE BY AT LEAST 30 INCHES AND A RETAINING WALL OF AT LEAST 18 INCHES AT THE SIDEWALK LINE.
(III) A FRONT YARD ENCLOSED BY A WALL OR FENCE OF PERMANENT CONSTRUCTION AT LEAST 30 INCHES IN HEIGHT AND ONE FLOWERING SHRUB PER 60 INCHES ACROSS THE WIDTH OF THE FRONT OF THE HOUSE*
(IV) HEDGE OF SHRUBS PLANTED 18 INCHES ON CENTER FOR WIDTH OF YARD FACING STREET AND TWO FLOWERING OR CANOPY TREES.*
* IN ORDER TO COMPLY WITH STREET TREE REQUIREMENTS, FLOWERING SHRUBS AND/OR CANOPY TREES MAY NEED TO BE LOCATED IN THE SIDE AND REAR YARDS.

B2 - TWINS
LOTS 36-75

	REQUIRED	ALLOWED	PROVIDED
LOT AREA MIN.	4,000 S.F.	3,000 S.F.***	3,000 S.F.
FRONT YARD (FROM R.O.W.)			
MINIMUM	30'	0'	0'
MAXIMUM	N/A	20'	20'
SIDE YARD MIN.	10'	7.50'***	7.50'
REAR YARD MIN.	20'	15.00'***	15.00'
LOT WIDTH MIN.	30'	18'*	18'
BLDG. HEIGHT MAX.	N/A	40'	35'
BUILDING COVERAGE MAX.	35%	N/A	35%
IMPERVIOUS COVERAGE MAX.	N/A	See Below**	

* AS PER SECTION 27-805B(4).1, 60% OF THE REQUIREMENT OF THE PERMITTED USE.
** AS PER SECTION 27-805B(4).1, THE AREA COVERED BY IMPERVIOUS SURFACES (i.e., area covered by buildings and pavement) SHALL BE MINIMIZED TO THE GREATEST EXTENT PRACTICABLE; BEST PRACTICES FOR SURFACE WATER MANAGEMENT SHALL BE REQUIRED.
*** AS PER SECTION 27-805B(4).1, 75% OF THE REQUIREMENT OF THE PERMITTED USE.

B2 - ATRIUM HOUSE
LOTS 76-115

	REQUIRED	ALLOWED	PROVIDED
LOT AREA MIN.	2,000 S.F.	1,500 S.F.***	1,500 S.F.
FRONT YARD (FROM R.O.W.)			
MINIMUM	N/A	0'	0'
MAXIMUM	N/A	20'	20'
SIDE YARD MIN.	N/A	N/A	0'
REAR YARD MIN.	N/A	N/A	0'
COURTYARD AREA MIN.	20% OF LOT AREA	20% OF LOT AREA	20%
COURTYARD DIMENSION MIN.	12'	12'	12'
LOT WIDTH MIN.	40'	24'*	24'
BLDG. HEIGHT MAX.	35'	35'	35'
BUILDING COVERAGE MAX.	65%	N/A	65%
IMPERVIOUS COVERAGE MAX.	N/A	See Below**	

* AS PER SECTION 27-805B(4).1, 60% OF THE REQUIREMENT OF THE PERMITTED USE.
** AS PER SECTION 27-805B(4).1, THE AREA COVERED BY IMPERVIOUS SURFACES (i.e., area covered by buildings and pavement) SHALL BE MINIMIZED TO THE GREATEST EXTENT PRACTICABLE; BEST PRACTICES FOR SURFACE WATER MANAGEMENT SHALL BE REQUIRED.
*** AS PER SECTION 27-805B(4).1, 75% OF THE REQUIREMENT OF THE PERMITTED USE.

PARKING REQUIREMENTS:

2 PARKING SPACES / UNIT
1 PARKING SPACE / GARAGE
AN ADDITIONAL 1/4 PARKING SPACE PER DWELLING UNIT FOR OVERFLOW OFF-STREET PARKING SHALL BE REQUIRED WHERE GARAGES AND/OR DRIVEWAYS ARE UTILIZED TO FULFILL THE OFF-STREET PARKING REQUIREMENT.

REQUIRED
2 SPACES PER UNIT (115 UNITS) = 230 SPACES
OVERFLOW PARKING = 29 SPACES
TOTAL = 259 SPACES

PROVIDED
2 SPACES PER UNIT (115 UNITS) = 230 SPACES
OVERFLOW PARKING = 65 SPACES
TOTAL = 295 SPACES

MCPC No. 06-0098-003
PROCESSED and REVIEWED. A report has been prepared by the Montgomery County Planning Commission in accordance with the Municipalities Planning Code.
Certified this date________
For the Director
Montgomery County Planning Commission

OWNER
GAMBONE SWAMP PIKE, L.P.
1030 W. GERMANTOWN PIKE
P.O. BOX 287
FAIRVIEW VILLAGE, PA. 19409

ENGINEER
CHAMBERS ASSOCIATES, INC
2962 SKIPPACK PIKE, P.O. BOX 678
WORCESTER, PENNSYLVANIA 19490-0678
484-991-8187

CALL BEFORE YOU DIG!
PENNSYLVANIA LAW REQUIRES 3 WORKING DAYS NOTICE FOR CONSTRUCTION PHASE AND 10 WORKING DAYS IN DESIGN STAGE - STOP CALL
PA 1 SYSTEM, INC. 1-800-242-1776
POCS SERIAL NUMBER
0145260,0145257

ACT 287, AS AMENDED, TABLE OF CONTACTS

COMPANY NAME
COMCAST COMMUNICATIONS, INC.
190 SHOEMAKER RD.
POTTSTOWN ,PA. 19464 610-367-6666
COMCAST CABLE
190 SHOEMAKER RD.
POTTSTOWN, PA. 19464 610-323-6400
VERIZON PENNSYLVANIA, INC.
900 RACE ST. (6TH FLOOR)
PHILADELPHIA, PA. 19107 215-269-5159
METROPOLITAN EDISON COMPANY
2800 POTTSVILLE PIKE
READING ,PA. 19612 1-800-545-7741
SUPERIOR WATER COMPANY
1885 SWAMP PIKE SUITE 109
P.O.BOX 525
GILBERTSVILLE ,PA. 19525-0525 610-222-4171
NEW HANOVER TOWNSHIP AUTHORITY
2943 N. CHARLOTTE ST.
GILBERTSVILLE, PA. 19525 610-754-6432
UGI READING
225 MORGANTOWN RD.
READING, PA. 19611 1-800-276-2722

RECORDING NOTE

SHEETS 1 THRU 54 OF THIS PLAN SET ARE TO BE CONSIDERED A COMPLETE RECORD PLAN SET FOR FILING PURPOSES IN THE MONTGOMERY COUNTY RECORDER OF DEEDS OFFICE. ONLY SHEETS 1, 2, 4-8 AND 38 SHALL BE RECORDED.
NO PERMIT SHALL BE ISSUED FOR ANY INDIVIDUAL UNITS OR SITE IMPROVEMENTS AS TO PHASES B, C, D AND E PRIOR TO THE EXECUTION OF A DEVELOPMENT AGREEMENT BETWEEN THE OWNER AND NEW HANOVER TOWNSHIP AND POSTING OF REQUIRED FINANCIAL SECURITY.

SITE CAPACITY COMPUTATIONS

RESOURCE	OPEN SPACE RATIO	ACRES OF LAND IN RESOURCES	RESOURCE PROTECTION LAND (ACRES X OPEN SPACE RATIO)	PROPOSED DISTURBANCE
AREAS WHERE TWO OR MORE RESOURCES OVERLAP	100%	0	0	0
FLOODWAY	100%	0	0	0
FLOOD FRINGE	80%*	0	0	0
APPROX. 100 YR FLOOD BOUNDARY	100%**	0	0	0
FLOODPLAIN SOILS	100%**	0	0	0
STEEP SLOPES 15%-25% 25% OR MORE	70% 80%	0 0	0 0	0 0
WOODLANDS:				
R-2, R-2M ALL OTHER ZONING DISTRICTS	80% 50%	0 0	0 0	0 0
WATERCOURSES STREAMS, PONDS	100%	0	0	0
WETLANDS	100%	0.68 ACRES	0.68 ACRES	0.00 ACRES
POND SHORELINES	80%	0	0	0
WETLAND MARGINS	80%	0	0	0
RIPARIAN CORRIDOR	100%	1.56 ACRES	1.56 ACRES	0.09 ACRES
LAND WITH RESOURCE RESTRICTIONS		2.24 ACRES		0.09 ACRES
RESOURCE PROTECTION LAND			2.24 ACRES	

CERTIFICATION OF TOWNSHIP APPROVAL

AT THE MEETING HELD ON ________________, THE BOARD OF SUPERVISORS OF NEW HANOVER TOWNSHIP BY RESOLUTION ___________, DULY ENACTED AND APPROVED THE SUBDIVISION / LAND DEVELOPMENT PLAN OF THE PROPERTY OF ________________ AS SHOWN HEREON.

DOUG MULLER, CHAIRMAN — ATTESTED: SECRETARY

TOWNSHIP ENGINEER CERTIFICATION

REVIEWED BY THE TOWNSHIP ENGINEER ON THE _______ DAY OF ________________, ________.

DAVID LEH
TOWNSHIP ENGINEER

PLANNING COMMISSION CERTIFICATION

REVIEWED BY THE NEW HANOVER TOWNSHIP PLANNING COMMISSION AND RECOMMENDED FOR APPROVAL ON THIS _____ DAY OF ________________, ________.

RICHARD MULSTAY, CHAIRMAN — ATTESTED: SECRETARY

RECORDING CERTIFICATE

RECORDED THIS _________ DAY OF ________________, ________, IN THE OFFICE FOR THE RECORDING OF DEEDS, ETC., IN AND FOR THE COUNTY OF MONTGOMERY OF NORRISTOWN, PENNSYLVANIA,

IN PLAN FILE CASE ____________ D.B. NO ___________, PAGE _________.

OWNER'S ACKNOWLEDGMENT

COMMONWEALTH OF PENNSYLVANIA
COUNTY OF MONTGOMERY
ON THE _______, DAY OF ________________ A.D., _______. BEFORE ME, THE UNDERSIGNED OFFICER, PERSONALLY APPEARED MICHAEL GAMBONE WHO ACKNOWLEDGED HIMSELF/HERSELF TO BE THE VICE PRESIDENT OF GAMBONE SWAMP PIKE INC., A PENNSYLVANIA CORPORATION AND GENERAL PARTNER OF GAMBONE SWAMP PIKE, L.P., AND THAT HE/SHE AS SUCH VICE PRESIDENT BEING AUTHORIZED TO DO SO, EXECUTED THE FOREGOING PLAN BY SIGNING THE NAME OF SAID CORPORATION BY HIMSELF/HERSELF AS THAT SAID CORPORATION IS THE GENERAL PARTNER OF GAMBONE SWAMP PIKE, L.P. OWNER OF THE DESIGNATED LAND. THAT ALL NECESSARY APPROVAL OF THE PLAN HAS BEEN OBTAINED AND IS ENDORSED THEREON AND THAT THE SAID LIMITED PARTNERSHIP DESIRES THAT THE FOREGOING PLAN MAY BE DULY RECORDED.

NOTARY PUBLIC — MY COMMISION EXPIRES

I MICHAEL GAMBONE OF GAMBONE SWAMP PIKE, INC., A PENNSYLVANIA CORPORATION AND GENERAL PARTNER OF GAMBONE SWAMP PIKE, L.P., CERTIFY THAT THE SAID LIMITED PARTNERSHIP IS THE REGISTERED OWNER OF THE LAND HEREIN SUBDIVIDED, THAT THE SAID LIMITED PARTNERSHIP HEREBY ADOPTS THIS PLAN AND DESIRES THE SAME TO BE RECORDED.

MICHAEL GAMBONE — VICE PRESIDENT

CERTIFICATION OF NEW HANOVER TOWNSHIP AUTHORITY

AT THE MEETING HELD ON THIS _________ DAY OF ________________, ________, NEW HANOVER TOWNSHIP AUTHORITY APPROVED THE SUBDIVISION / LAND DEVELOPMENT PLAN OF THE PROPERTY OF ______________ AS SHOWN HEREON.

THOMAS MISKIEWICZ, CHAIRMAN — ATTESTED: SECRETARY

SURVEYOR CERTIFICATION

I HEREBY CERTIFY THAT THIS PLAN REPRESENTS A SURVEY MADE BY ME, THAT THE MONUMENTS SHOWN HEREON EXIST AS LOCATED AND THAT ALL DIMENSIONAL DETAILS AREA CORRECT.

DATE — ROBERT M. COHRAC (SEAL)

BMP STATEMENT

STORMWATER MANAGEMENT FACILITIES AND/OR BEST MANAGEMENT PRACTICES (BMP) ARE FIXTURES THAT CAN BE ALTERED OR REMOVED ONLY AFTER THE APPROVAL BY THE TOWNSHIP.

MICHAEL GAMBONE

WETLANDS CERTIFICATION

I DO HEREBY CERTIFY THAT THE DELINEATION OF THE WETLANDS AND WATERS OF THE U.S. SHOWN ON THIS PLAN ARE IN ACCORDANCE WITH THE FINDINGS OF MY FIELD INVESTIGATION AND THAT I HAVE DETERMINED THESE LIMITS BASED UPON THE CORPS OF ENGINEER GUIDELINES.

DATE — SIGNATURE

DRAWING LIST:

1 of 54 COVER SHEET
2 of 54 SUBDIVISION PLAN
3 of 54 OPEN SPACE PLAN
4 of 54 RECORD PLAN (1 of 5)
5 of 54 RECORD PLAN (2 of 5)
6 of 54 RECORD PLAN (3 of 5)
7 of 54 RECORD PLAN (4 of 5)
8 of 54 RECORD PLAN (5 of 5)
9 of 54 OVERALL EXISTING FEATURES PLAN
10 of 54 GRADING AND UTILITY PLAN (1 of 5)
11 of 54 GRADING AND UTILITY PLAN (2 of 5)
12 of 54 GRADING AND UTILITY PLAN (3 of 5)
13 of 54 GRADING AND UTILITY PLAN (4 of 5)
14 of 54 GRADING AND UTILITY PLAN (5 of 5)
15 of 54 OVERALL EROSION CONTROL PLAN
16 of 54 EROSION CONTROL PLAN (1 of 5)
17 of 54 EROSION CONTROL PLAN (2 of 5)
18 of 54 EROSION CONTROL PLAN (3 of 5)
19 of 54 EROSION CONTROL PLAN (4 of 5)
20 of 54 EROSION CONTROL PLAN (5 of 5)
21 of 54 EROSION CONTROL NOTES
22 of 54 EROSION CONTROL DETAILS
23 of 54 EROSION CONTROL DETAILS
24 of 54 OVERALL POST CONSTRUCTION STORMWATER MANAGEMENT PLAN
25 of 54 POST CONSTRUCTION STORMWATER MANAGEMENT PLAN (1 of 5)
26 of 54 POST CONSTRUCTION STORMWATER MANAGEMENT PLAN (2 of 5)
27 of 54 POST CONSTRUCTION STORMWATER MANAGEMENT PLAN (3 of 5)
28 of 54 POST CONSTRUCTION STORMWATER MANAGEMENT PLAN (4 of 5)
29 of 54 POST CONSTRUCTION STORMWATER MANAGEMENT PLAN (5 of 5)
30 of 54 POST CONSTRUCTION STORMWATER MANAGEMENT DETAILS
31 of 54 POST CONSTRUCTION STORMWATER MANAGEMENT DETAILS
32 of 54 PLANTING PLAN - L1
33 of 54 PUBLIC SPACES PLANTING PLAN - L2
34 of 54 PLANT SCHEDULE & NOTES - L3
35 of 54 DETAILS - L4
36 of 54 LIGHTING PLAN - L5
37 of 54 (RESERVED)
38 of 54 PHASING PLAN
39 of 54 PLAN AND PROFILE - ROAD 'A'
40 of 54 PLAN AND PROFILE - ROAD 'B'
41 of 54 PLAN AND PROFILE - ROAD 'C'
42 of 54 PLAN AND PROFILE - ROAD 'D'
43 of 54 PLAN AND PROFILE - ROAD 'E'
44 of 54 PLAN AND PROFILE - MIDDLE CREEK ROAD
45 of 54 AERIAL PHOTOGRAPH
46 of 54 EMERGENCY VEHICLE CIRCULATION PLAN
47 of 54 EMERGENCY VEHICLE CIRCULATION PLAN
48 of 54 EMERGENCY VEHICLE CIRCULATION PLAN
49 of 54 SANITARY SEWER DETAILS
50 of 54 WATER DETAILS
51 of 54 DETAILS
52 of 54 DETAILS
53 of 54 DETAILS
54 of 54 SIGNAGE AND STRIPING PLAN

COMMONWEALTH OF PENNSYLVANIA REGISTERED PROFESSIONAL ENGINEER JOSEPH P. HANNA PE033291E

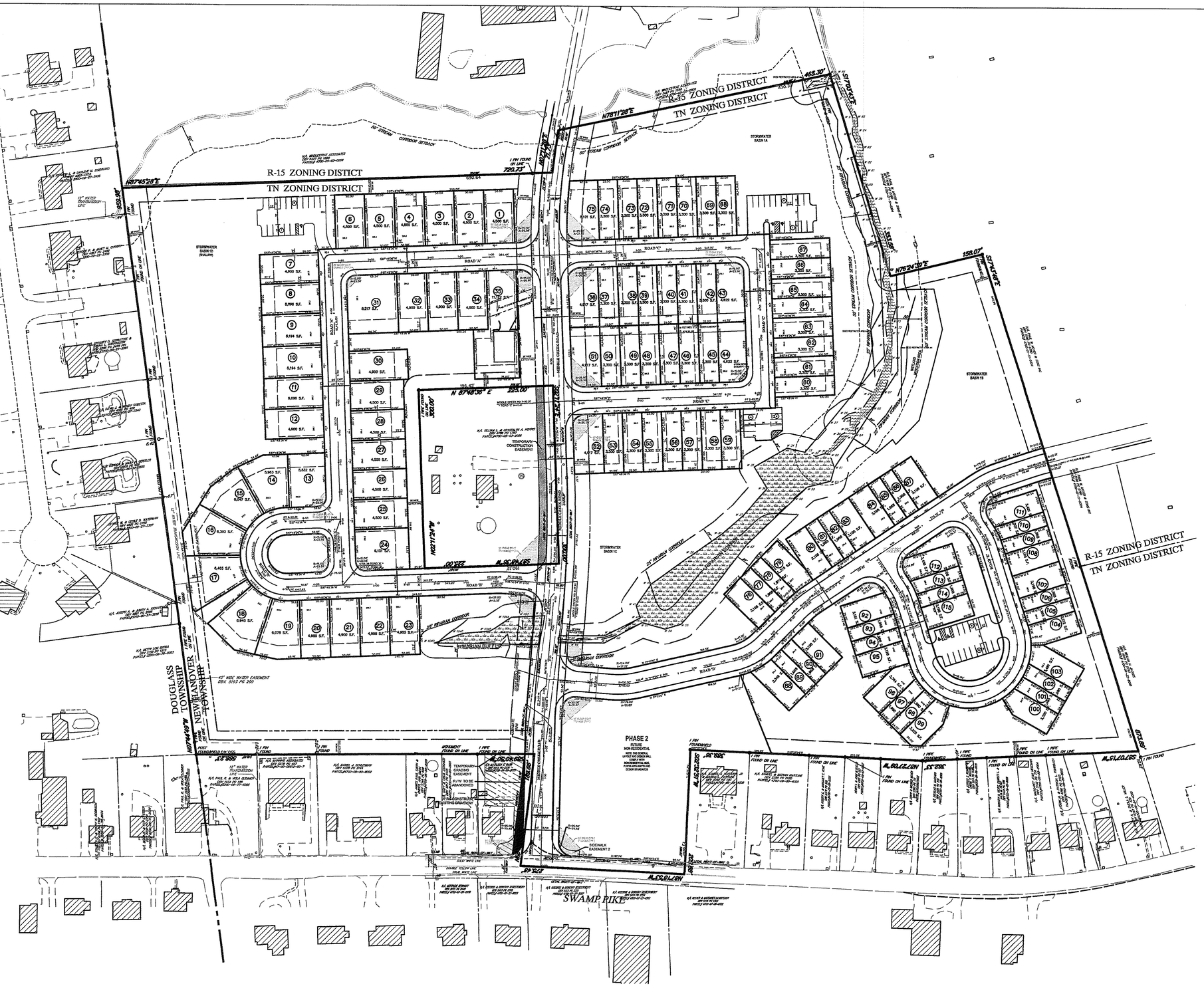

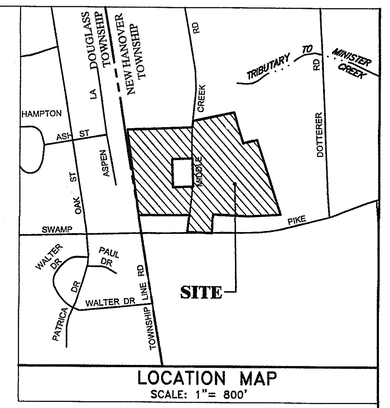

LOCATION MAP
SCALE: 1"= 800'

LEGEND

EXISTING		PROPOSED
□	MONUMENT FOUND	■ TO BE SET
○	IRON PIN OR PIPE FOUND	○ TO BE SET
	BUILDING LINE	
	CENTER LINE	
	CREEK BED	
	CURB LINE	
	EASEMENT LINE	
	EDGE OF PAVING	
	FENCE LINE	
	FLOOD PLAIN LINE	
	LOT LINE	
	PARKING STRIPING	
	PROPERTY LINE	
	RIGHT OF WAY LINE	
	~~SIDEWALK~~ LINEWORK	
	SIDEWALK	
"D"	SIGNAGE	"D"
	WETLANDS	
	ZONING LINE	
	BUFFER LINE	
	STREAM CORRIDOR	
	STREAM CORRIDOR BUFFER	
	WETLANDS	
	WETLANDS BUFFER	
	WATERS OF THE U.S.	
	WATERS OF THE U.S. BUFFER	

"FINAL"

80 0 80 160 240

GRAPHIC SCALE

NO.	DATE	DESCRIPTION	BY
8	1/9/17	REVISED PHASE "D"	JAS
7	11/9/15	REVISED PHASE "B"	JAS
6	8/12/14	REV MIDDLE CREEK ROAD	RMC
5	9/9/13	REV. PER TWP. ENG. COMMENTS	RMC
4	8/23/13	REV. PER TWP. ENG. LETTER DATED 7/31/13	JAS
3	8/24/13	REV. PER TWP. ENG. LETTERS DATED 1/3/13, 2/7/13	JAS
2	5/6/13	REV. AS PER NPDES MINOR REVISION	JAS
1	11/30/12	REV. AS PER TWP. ENG. LETTER DATED 6/6/12	JAS

RENNINGER PROPERTY SUBDIVISION

SUBDIVISION PLAN

PREPARED FOR

GAMBONE SWAMP PIKE, L.P.

NEW HANOVER TOWNSHIP

MONTGOMERY COUNTY

PENNSYLVANIA

Chambers Associates, Inc.
Consulting Engineers and Surveyors
2962 Skippack Pike P.O. Box 678
Worcester, PA 19490-0678
484-991-8187

SCALE	DATE	JOB	DRAWING NO.
1"=80'	4-27-12	485-084	SHEET 2 of 54
MANAGER: JPH		DRAWN BY: JAS	

L:\Projects\485084\Subdivision\SUBDIVISION SET OF PLANS 1-9-17\DRDTP12 4-8-15 8.5x14.dwg, 2.1/2/2017 11:03:09 PM, RICHARD CHAMBERS

THE BALANCE OF THE OPEN SPACE AREAS ARE "PERIPHERAL OPEN SPACE"

OPEN SPACE CALCULATIONS

REQUIRED:
35% OF GROSS ACREAGE
= 0.35 (32.13 AC.)
= 11.24 AC.

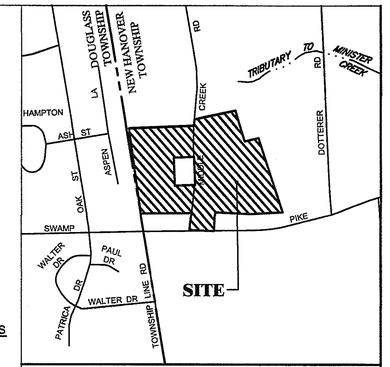

LOCATION MAP
SCALE: 1"= 800'

OPENSPACE AREA CALCS

OPEN SPACE #	OPEN SPACE AREA GROSS (AC)	BASIN AREAS (AC)	PARKING AREAS (AC)	OPEN SPACE AREA NET (AC)	USE
1	5.84	0	0.17	5.67	NATURAL
2	0.64	0	0	0.64	LAWN
3	0.14	0	0	0.14	LAWN
4	7.38	1.67	0.24	5.47	NATURAL
5	1.77	0	0	1.77	LAWN
6	0.07	0	0	0.07	LAWN
7	0.31	0	0.15	0.16	LAWN
TOTAL	16.15	1.67	0.56	13.92	LAWN

TYPES OF OPEN SPACE AS PER SECTION 27-807B.A.&B.

OPEN SPACE #	INTERNAL OPEN SPACE AREA (AC)	RECREATIONAL OPEN SPACE AREA (AC)	PERIPHERAL OPEN SPACE AREA (AC)
1	0	3.64	2.03
2	0	0	0.64
3	0.14	0	0.14
4	0.05	0	5.42
5	0	0	1.77
6	0.07	0	0
7	0	0	0.16
TOTAL	0.26	3.64	10.02

NOTE:
1. INTERNAL OS + RECREATIONAL OS MUST BE NO LESS THAN 30% OF THE MINIMUM REQUIRED OPEN SPACE (AND MAY NOT CONTAIN ENVIRONMENTALLY CONSTRAINED AREAS.)
TOTAL INTERNAL OS + RECREATIONAL OS = 3.90 AC. / 11.24 AC. = 34.7%

2. OPEN SPACE SHALL NOT BE SEPARATELY SOLD AND SHALL NOT BE FURTHER SUBDIVIDED OR DEVELOPED.

LEGEND

PROPOSED. IRON PIN
PROPOSED CONC. MONUMENT
BUILDING SETBACK LINE
EX. IRON PIN
EX. MONUMENT
EX. SANITARY SEWER MH
EXISTING WOOD LINE
EX. TREE
WATERS OF THE UNITED STATES, INCLUDING FEDERALLY REGULATED WETLANDS
WATERS OF THE UNITED STATES

"FINAL"

GRAPHIC SCALE
60 0 60 120 180

NO.	DATE	DESCRIPTION	BY
8	1/9/17	REVISED PHASE "D"	JAS
7	11/9/15	REVISED PHASE "B"	JAS
6	8/12/14	REV MIDDLE CREEK ROAD	RMC
5	9/6/13	REV. PER TWP. ENG. COMMENTS	RMC
4	8/23/13	REV. PER TWP. ENG. LETTER DATED 7/31/13	JAS
3	6/24/13	REV. PER TWP. ENG. LETTERS DATED 1/3/13, 2/7/13	JAS
2	5/6/13	REV. AS PER NPDES MINOR REVISION	JAS
1	11/30/12	REV. AS PER TWP. ENG. LETTER DATED 6/6/12	JAS

RENNINGER PROPERTY SUBDIVISION
OPEN SPACE PLAN
PREPARED FOR
GAMBONE SWAMP PIKE, L.P.
NEW HANOVER TOWNSHIP
MONTGOMERY COUNTY
PENNSYLVANIA

Chambers Associates, Inc.
Consulting Engineers and Surveyors
2962 Skippack Pike P.O. Box 678
Worcester, PA 19490-0678
484-991-8187

SCALE	DATE	JOB	DRAWING NO.
1"=60'	4-27-12	485-084	SHEET 3 of 54
MANAGER: JPH		DRAWN BY: EDM	

L:\Chambers\2012\12-485\Drawings\SUBDIVISION SET OF PLANS 1-6-17\SHEETS 1.dwg, 3, 1/10/2017 12:53:34 PM, Mary Ann Kilmer

R-15 ZONING DISTICT

TN ZONING DISTRICT

N/L WINDLESTRAE ASSOCIATES
DBV 5427 PG 1698
PARCEL# 4700-05-02-0009

N/L L. & DARLENE M. EISENHARD
DBV 4868-0855
PARCEL# 3200-00-27-3406

N/L JEROME P. & JANET M. CHRISTY
DBV 4867 PG 2482
PARCEL#3200-00-22-3388

N/L GREGORY D. SERRATORE & DONNA L. HARRINGTON
DBV 5205 PG 2475 PIN
PARCEL#3200-00-27-3361

N/L DAVID J. & WENDY SCIBETTA
DBV 4881 PG 409
PARCEL#3200-00-27-3343

N/L GORDON & MARY P. GEISSLER
DBV 4908 PG 338
PARCEL#3200-00-27-3325

GEORGE W. & CECILE D. WATERMAN
DBV 4881 PG 0750
PARCEL# 3200-00-27-3307

N/L WILLIAM L. & CRYSTALYN A. NORRIS
DBV 4786 PG 1787
PARCEL#4700-05-03-2006

N87°45'28"E 959.98'

1 PIN FOUND

1 PIN FOUND ON LINE

1 PIN FOUND ON LINE 720.73'

690.64' 704.28'

12" WATER TRANSMISSION LINE

25' WIDE BUFFER YARD

STORMWATER BASIN 1D (SHALLOW)

ROAD 'A'

ROAD 'B'

MIDDLE CREEK ROAD

CARTWAY 60' R/W

EXISTING HOUSE (TO REMAIN)

DWELLING REMAIN

BUILDINGS TO REMAIN

TEMPORARY CONSTRUCTION EASEMENT

20 FT STORM SEWER EASEMENT

25' CLEAR SIGHT TRIANGLE (TYP.)

50' CLEAR SIGHT

1	4,500 S.F.	
2	4,500 S.F.	
3	4,500 S.F.	
4	4,500 S.F.	
5	4,500 S.F.	
6	4,500 S.F.	
7	4,900 S.F.	
8	5,096 S.F.	
9	5,194 S.F.	
10	5,194 S.F.	
11	5,096 S.F.	
12	4,900 S.F.	
13	5,532 S.F.	
14	5,963 S.F.	
15	6,047 S.F.	
16	6,392 S.F.	
24	4,500 S.F.	
25	4,500 S.F.	
26	4,500 S.F.	
27	4,500 S.F.	
28	4,500 S.F.	
29	4,500 S.F.	
30	4,900 S.F.	
31	8,217 S.F.	
32	4,900 S.F.	
33	4,900 S.F.	
34	4,900 S.F.	
35	11,122 S.F.	

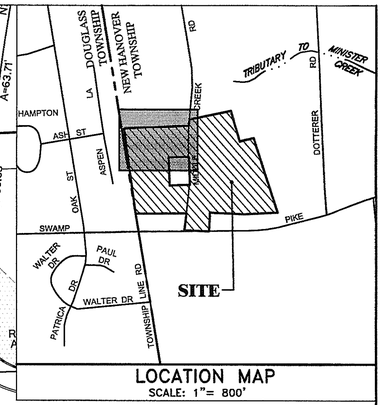

LOCATION MAP
SCALE: 1"= 800'

LEGEND

EXISTING		PROPOSED
□	MONUMENT FOUND	■ TO BE SET
○	IRON PIN OR PIPE FOUND	○ TO BE SET
	BUILDING LINE	
	CENTER LINE	
	CREEK BED	
	CURB LINE	
	EASEMENT LINE	
	EDGE OF PAVING	
	FENCE LINE	
	FLOOD PLAIN LINE	
	LOT LINE	
	PARKING STRIPING	
	PROPERTY LINE	
	RIGHT OF WAY LINE	
	ROADWAY MARKINGS	
	SETBACK LINE	
	SIDEWALK	
-P-	SIGNAGE	-P-
	WETLANDS	
	ZONING LINE	
	BUFFER LINE	
	STREAM CORRIDOR	
	STREAM CORRIDOR BUFFER	
	WETLANDS	
	WETLANDS BUFFER	
	WATERS OF THE U.S.	
	WATERS OF THE U.S. BUFFER	

"FINAL"

GRAPHIC SCALE
30 0 30 60 90

NO.	DATE	DESCRIPTION	BY
8	1/9/17	REVISED PHASE "D"	JAS
7	11/9/15	REVISED PHASE "B"	JAS
6	8/12/14	REV MIDDLE CREEK ROAD	RMC
5	9/6/13	REV. PER TWP. ENG. COMMENTS	RMC
4	8/23/13	REV. PER TWP. ENG. LETTER DATED 7/31/13	JAS
3	6/24/13	REV. PER TWP. ENG. LETTERS DATED 1/3/13, 2/7/13	JAS
2	5/6/13	REV. AS PER NPDES MINOR REVISION	JAS
1	11/30/12	REV. AS PER TWP. ENG. LETTER DATED 6/6/12	JAS

RENNINGER PROPERTY SUBDIVISION

RECORD PLAN (1 of 5)

PREPARED FOR

GAMBONE SWAMP PIKE, L.P.

NEW HANOVER TOWNSHIP
MONTGOMERY COUNTY
PENNSYLVANIA

Chambers Associates, Inc.
Consulting Engineers and Surveyors
2962 Skippack Pike P.O. Box 678
Worcester, PA 19490-0678
484-991-8187

SCALE	DATE	JOB	DRAWING NO.
1"=30'	4-27-12	485-084	SHEET 4 of 54
MANAGER: JPH		DRAWN BY: JAS	

R-15 ZONING DISTRICT

TN ZONING DISTRICT

N/L WINDLESTRAE ASSOCIATES DBV 5427 PG 1698 PARCEL# 4700-05-02-0009

DEED RESTRICTED AREA #1

N78°11'28"E 444.08'

430.30

IRON PIN FOUND & HELD

S17°03'43"E

N07°11'28"E 71.73'

PT 12+88.24

PT 12+93.09

12+50

N10°22'31"E 24.49'

L=177.31'

30.00

25' WIDE BUFFER YARD

36' WIDE BUFFERYARD

50' STREAM CORRIDOR SETBACK

STORMWATER BASIN 1A

A=180.93'

A=150.09'

A=63.71'

R=795.00'

R=855.00'

A=103.36'

.05°19'48"=d

90°32'21"=T

11+00

R=825.00'

11+50

16.50'

R=808.50'

PC 10+42.69

10+50

A=86.36'

S87°48'36"W 278.06'

47.06'

33.00'

N21°11'24"W

7.5'

75 5,101 S.F.

74 3,300 S.F.

73 3,300 S.F.

72 3,300 S.F.

71 3,300 S.F.

70 3,300 S.F.

69 3,300 S.F.

68 3,300 S.F.

100.00'

R=25.00' A=27.85'

31.94'

317.90'

54.96'

S87°48'36"W

ROAD 'C'

0+00

0+50

1+00

1+50

2+00

2+50 347.70'

3+00

3+50

25' CLEAR SIGHT TRIANGLE (TYP.)

49' R/W

26' CART.

PT 3+47.70

257.70'

31.70'

R=15.00' A=23.56'

R=25.00' A=26.90'

28.00'

36 4,917 S.F.

37 3,300 S.F.

38 3,300 S.F.

39 3,300 S.F.

40 3,300 S.F.

41 3,300 S.F.

42 3,300 S.F.

43 4,622 S.F.

294.70'

46.70'

CARTWAY 34'

60' R/W

25' WIDE BUFFER YARD

N87°48'36"E

50.00'

S87°48'36"W

30 FEET WIDE STORM SEWER EASEMENT B

51 4,917 S.F.

50 3,300 S.F.

49 3,300 S.F.

48 3,300 S.F.

47 3,300 S.F.

46 3,300 S.F.

45 3,300 S.F.

44 4,622 S.F.

STORM SEWER EASEMENT C

MIDDLE CREEK ROAD

S02°11'24"E 387.09'

182.83'

173.75'

231.67'

86.87'

92.24'

MIDDLE CREEK RD 10+29.37 = ROAD A & C 0+00

397.08'

48.84'

A=22.69'

R=25.00' A=26.90'

CARTWAY 34'

60' R/W

25' WIDE BUFFER YARD

50' CLEAR SIGHT TRIANGLE (TYP.)

52 4,917 S.F.

53 3,300 S.F.

54 3,300 S.F.

55 3,300 S.F.

56 3,300 S.F.

57 3,300 S.F.

58 3,300 S.F.

59 3,300 S.F.

281.00'

318.70'

59.70'

347.70'

6+00

6+50

7+00

7+50

8+50

9+00

PT 5+93.70

ROAD 'C'

DEED RESTRICTED AREA

25' RIPARIAN CORRIDOR

50' STREAM CORRIDOR SETBACK

N/L PAUL W. MOYER & SONS INC DBV 5186 PG 0780 PARCEL# 4700-01-11-0304

353.58'

N76°24'39"E 158.07'

S17°43'48"E

940.99'

25' BUFFER YARD

WETLAND MITIGATION AREA

DEED RESTRICTED AREA #4

STORMWATER BASIN 1B

This Plan amends previously approved "RECORD PLAN (2 of 5)" Plan Book 0039-00266, Dated 9-17-2013

TAX PARCEL INFORMATION: (AS RECORDED IN THE OFFICE FOR THE RECORDING OF DEEDS, ETC. IN AND FOR THE COUNTY OF MONTGOMERY)

TAX PARCEL NO. 47-00-05028-41-8
BLOCK 41F UNIT 115

RECORD OWNER/APPLICANT:
GAMBONE SWAMP PIKE, L.P.
1030 W. GERMANTOWN PIKE
P.O. BOX 287
FAIRVIEW VILLAGE, PA. 19409

R=345.00' A=24.8

R=175.00' A=46.69'

N 71°21'19" E 58.66'

N 33°30'43" W

126.00'

39.00'

24.00'

B2 – TWNS
LOTS 36–75

	REQUIRED	ALLOWED	PROVIDED
LOT AREA MIN.	4,000 S.F.	3,000 S.F.***	3,000 S.F.
FRONT YARD (FROM R.O.W.) MINIMUM	30'	0'	0'
MAXIMUM	N/A	20'	20'
SIDE YARD MIN.	10'	7.50'***	7.50'
REAR YARD MIN.	20'	15.00'***	15.00'
LOT WIDTH MIN.	30'	18'*	18'
BLDG. HEIGHT MAX.	N/A	40'	35'
BUILDING COVERAGE MAX.	35%	N/A	35%
IMPERVIOUS COVERAGE MAX.	N/A	See Below**	

* AS PER SECTION 27-8088(4).1, 60% OF THE REQUIREMENT OF THE PERMITTED USE.
** AS PER SECTION 27-8088(4).1, THE AREA COVERED BY IMPERVIOUS SURFACES (i.e., area covered by buildings and pavement) SHALL BE MINIMIZED TO THE GREATEST EXTENT PRACTICABLE; BEST PRACTICES FOR SURFACE WATER MANAGEMENT SHALL BE REQUIRED.
*** AS PER SECTION 27-8088(4).1, 75% OF THE REQUIREMENT OF THE PERMITTED USE.

LEGEND

EXISTING		PROPOSED
□	MONUMENT FOUND	■ TO BE SET
○	IRON PIN OR PIPE FOUND	○ TO BE SET
	BUILDING LINE	
	CENTER LINE	
	CREEK BED	
	CURB LINE	
	EASEMENT LINE	
	EDGE OF PAVING	
	FENCE LINE	
	FLOOD PLAIN LINE	
	LOT LINE	
	PARKING STRIPING	
	PROPERTY LINE	
	RIGHT OF WAY LINE	
	ROADWAY MARKINGS	
	SETBACK LINE	
	SIDEWALK	
-o-	SIGNAGE	-o-
	WETLANDS	
	ZONING LINE	
	BUFFER LINE	
	STREAM CORRIDOR	
	STREAM CORRIDOR BUFFER	
	WETLANDS	
	WETLANDS BUFFER	
	WATERS OF THE U.S.	
	WATERS OF THE U.S. BUFFER	

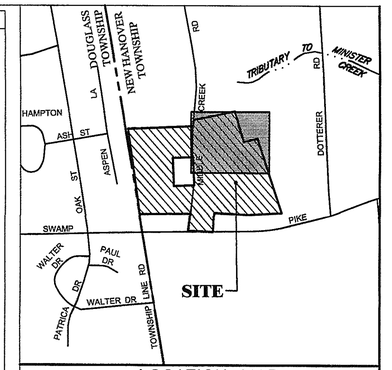

LOCATION MAP
SCALE: 1"= 800'

CERTIFICATION OF TOWNSHIP APPROVAL

AT THE MEETING HELD ON _____, THE BOARD OF SUPERVISORS OF NEW HANOVER TOWNSHIP BY RESOLUTION _____, DULY ENACTED AND APPROVED THE SUBDIVISION / LAND DEVELOPMENT PLAN OF THE PROPERTY OF _____ AS SHOWN HEREON.

DOUG MILLER, CHAIRMAN — ATTESTED: SECRETARY

TOWNSHIP ENGINEER CERTIFICATION

REVIEWED BY THE TOWNSHIP ENGINEER ON THE _____ DAY OF _____, _____.

DAVID LEH, TOWNSHIP ENGINEER

PLANNING COMMISSION CERTIFICATION

REVIEWED BY THE NEW HANOVER TOWNSHIP PLANNING COMMISSION AND RECOMMENDED FOR APPROVAL ON THIS _____ DAY OF _____, _____.

PHILIP AGLIANO, CHAIRMAN — ATTESTED: SECRETARY

RECORDING CERTIFICATE

RECORDED THIS _____ DAY OF _____, _____ IN THE OFFICE FOR THE RECORDING OF DEEDS, ETC., IN AND FOR THE COUNTY OF MONTGOMERY OF NORRISTOWN, PENNSYLVANIA,

IN PLAN FILE CASE _____ D.B. NO _____ PAGE _____.

OWNER'S ACKNOWLEDGMENT

COMMONWEALTH OF PENNSYLVANIA
COUNTY OF MONTGOMERY

ON THE _____ DAY OF _____, A.D., _____, BEFORE ME, THE UNDERSIGNED OFFICER, PERSONALLY APPEARED MICHAEL GAMBONE, WHO ACKNOWLEDGED HIMSELF/HERSELF TO BE THE VICE PRESIDENT OF GAMBONE SWAMP PIKE INC., A PENNSYLVANIA CORPORATION AND GENERAL PARTNER OF GAMBONE SWAMP PIKE, L.P., AND THAT HE/SHE AS SUCH VICE PRESIDENT BEING AUTHORIZED TO DO SO, EXECUTED THE FOREGOING PLAN BY SIGNING THE NAME OF SAID CORPORATION BY HIMSELF/HERSELF AS THAT SAID CORPORATION IS THE GENERAL PARTNER OF GAMBONE SWAMP PIKE, L.P., OWNER OF THE DESIGNATED LAND, THAT ALL NECESSARY APPROVAL OF THE PLAN HAS BEEN OBTAINED AND IS ENDORSED THEREON AND THAT THE SAID LIMITED PARTNERSHIP DESIRES THAT THE FOREGOING PLAN MAY BE DULY RECORDED.

NOTARY PUBLIC — MY COMMISION EXPIRES

I MICHAEL GAMBONE OF GAMBONE SWAMP PIKE INC., A PENNSYLVANIA CORPORATION AND GENERAL PARTNER OF GAMBONE SWAMP PIKE, L.P., CERTIFY THAT THE SAID LIMITED PARTNERSHIP IS THE REGISTERED OWNER OF THE LAND HEREON SUBDIVIDED, THAT THE SAID LIMITED PARTNERSHIP HEREON ADOPTS THIS PLAN AND DESIRES THE SAME TO BE RECORDED.

MICHAEL GAMBONE, VICE PRESIDENT

CERTIFICATION OF NEW HANOVER TOWNSHIP AUTHORITY

AT THE MEETING HELD ON THIS _____ DAY OF _____, _____, NEW HANOVER TOWNSHIP AUTHORITY APPROVED THE SUBDIVISION / LAND DEVELOPMENT PLAN OF THE PROPERTY OF _____ AS SHOWN HEREON.

THOMAS MISKIEWICZ, CHAIRMAN — ATTESTED: SECRETARY

SURVEYOR CERTIFICATION

I HEREBY CERTIFY THAT THIS PLAN REPRESENTS A SURVEY MADE BY ME, THAT THE MONUMENTS SHOWN HEREON EXIST AS LOCATED AND THAT ALL DIMENSIONAL DETAILS ARE CORRECT.

DATE — ROBERT M. CONRAD (SEAL)

"FINAL"

30 0 30 60 90
GRAPHIC SCALE

NO.	DATE	DESCRIPTION	BY
8	1/9/17	REVISED PHASE "D"	JAS
7	11/9/15	REVISED PHASE "D"	JAS
6	8/12/14	REV MIDDLE CREEK ROAD	RMC
5	9/6/13	REV. PER TWP. ENG. COMMENTS	RMC
4	8/23/13	REV. PER TWP. ENG. LETTER DATED 7/31/13	JAS
3	6/24/13	REV. PER TWP. ENG. LETTERS DATED 1/3/13, 2/7/13	JAS
2	5/6/13	REV. AS PER NPDES MINOR REVISION	JAS
1	11/30/12	REV. AS PER TWP. ENG. LETTER DATED 6/6/12	JAS

RENNINGER PROPERTY SUBDIVISION

RECORD PLAN (2 of 5)

PREPARED FOR

GAMBONE SWAMP PIKE, L.P.

NEW HANOVER TOWNSHIP
MONTGOMERY COUNTY
PENNSYLVANIA

Chambers Associates, Inc.
Consulting Engineers and Surveyors
2962 Skippack Pike P.O. Box 678
Worcester, PA 19490–0678
484–991–8187

SCALE	DATE	JOB	DRAWING NO.
1"=30'	4–27–12	485–084	SHEET 5 of 54
MANAGER: JPH		DRAWN BY: JAS	

L:\Projects\485084\Subdivision\RENNINGER SET OF PLANS 1-4-16\1-5-16.dwg, 5, 1/5/2017 7:41:13 PM, ROCHFORD

R-15 ZONING DISTRICT

TN ZONING DISTRICT

B2 - ATRIUM HOUSE
LOTS 76-115

	REQUIRED	ALLOWED	PROVIDED
LOT AREA MIN.	2,000 S.F.	1,500 S.F.***	1,500 S.F.
FRONT YARD (FROM R.O.W.) MINIMUM	N/A	9'	9'
MAXIMUM	N/A	20'	20'
SIDE YARD MIN.	N/A	N/A	0'
REAR YARD MIN.	N/A	N/A	20'
COURTYARD AREA MIN.	20% OF LOT AREA	20% OF LOT AREA	20%
COURTYARD DIMENSION MIN.	12'	12'	12'
LOT WIDTH MIN.	40'	24'*	24'
BLDG. HEIGHT MAX.	35'	35'	35'
BUILDING COVERAGE MAX.	65%	N/A	65%
IMPERVIOUS COVERAGE MAX.	N/A	See Below**	

* AS PER SECTION 27-805B(4).1, 60% OF THE REQUIREMENT OF THE PERMITTED USE.
** AS PER SECTION 27-805B(4).1, THE AREA COVERED BY IMPERVIOUS SURFACES (i.e., area covered by buildings and pavement) SHALL BE MINIMIZED TO THE GREATEST EXTENT PRACTICABLE; BEST PRACTICES FOR SURFACE WATER MANAGEMENT SHALL BE REQUIRED
*** AS PER SECTION 27-805B(4).1, 75% OF THE REQUIREMENT OF THE PERMITTED USE.

LEGEND

EXISTING		PROPOSED
□	MONUMENT FOUND	■ TO BE SET
○	IRON PIN OR PIPE FOUND	○ TO BE SET
	BUILDING LINE	
	CENTER LINE	
	CREEK BED	
	CURB LINE	
	EASEMENT LINE	
	EDGE OF PAVING	
	FENCE LINE	
	FLOOD PLAIN LINE	
	LOT LINE	
	PARKING STRIPING	
	PROPERTY LINE	
	RIGHT OF WAY LINE	
	ROADWAY MARKINGS	
	SETBACK LINE	
	SIDEWALK	
	SIGNAGE	
	WETLANDS	
	ZONING LINE	
	BUFFER LINE	
	STREAM CORRIDOR	
	STREAM CORRIDOR BUFFER	
	WETLANDS	
	WETLANDS BUFFER	
	WATERS OF THE U.S.	
	WATERS OF THE U.S. BUFFER	

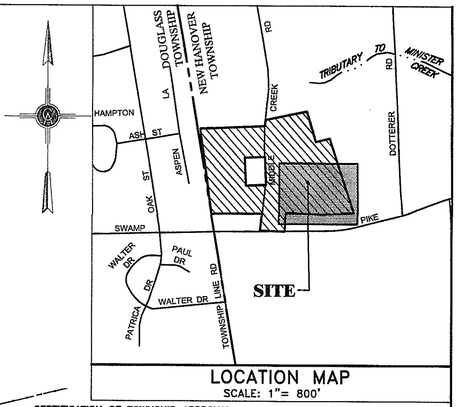

LOCATION MAP
SCALE: 1"= 800'

CERTIFICATION OF TOWNSHIP APPROVAL

AT THE MEETING HELD ON _____, THE BOARD OF SUPERVISORS OF NEW HANOVER TOWNSHIP BY RESOLUTION _____, DULY ENACTED AND APPROVED THE SUBDIVISION / LAND DEVELOPMENT PLAN OF THE PROPERTY OF _____ AS SHOWN HEREON.

PHILIP ADLUNG, CHAIRMAN — ATTESTED: SECRETARY

TOWNSHIP ENGINEER CERTIFICATION

REVIEWED BY THE TOWNSHIP ENGINEER ON THE _____ DAY OF _____, _____.

DAVID LEH, TOWNSHIP ENGINEER

PLANNING COMMISSION CERTIFICATION

REVIEWED BY THE NEW HANOVER TOWNSHIP PLANNING COMMISSION AND RECOMMENDED FOR APPROVAL ON THIS _____ DAY OF _____, _____.

SUSAN SMITH, CHAIRWOMAN — ATTESTED: SECRETARY

RECORDING CERTIFICATE

RECORDED THIS _____ DAY OF _____, _____ IN THE OFFICE FOR THE RECORDING OF DEEDS, ETC., IN AND FOR THE COUNTY OF MONTGOMERY OF NORRISTOWN, PENNSYLVANIA.

IN PLAN FILE CASE _____, D.B. NO _____, PAGE _____.

OWNER'S ACKNOWLEDGMENT

COMMONWEALTH OF PENNSYLVANIA
COUNTY OF MONTGOMERY

ON THE _____ DAY OF _____, A.D., _____ BEFORE ME, THE UNDERSIGNED OFFICER, PERSONALLY APPEARED MICHAEL GAMBONE, WHO ACKNOWLEDGED HIMSELF/HERSELF TO BE THE VICE PRESIDENT OF GAMBONE SWAMP PIKE INC., A PENNSYLVANIA CORPORATION AND GENERAL PARTNER OF GAMBONE SWAMP PIKE, L.P., AND THAT HE/SHE AS SUCH VICE PRESIDENT BEING AUTHORIZED TO DO SO, EXECUTED THE FOREGOING PLAN BY SIGNING THE NAME OF SAID CORPORATION BY HIMSELF/HERSELF AS THAT SAID CORPORATION IS THE GENERAL PARTNER OF GAMBONE SWAMP PIKE, L.P., OWNER OF THE DESIGNATED LAND, THAT ALL NECESSARY APPROVAL OF THE PLAN HAS BEEN OBTAINED AND IS ENDORSED THEREON AND THAT THE SAID LIMITED PARTNERSHIP DESIRES THAT THE FOREGOING PLAN MAY BE DULY RECORDED.

NOTARY PUBLIC — MY COMMISSION EXPIRES

I MICHAEL GAMBONE OF GAMBONE SWAMP PIKE, INC., A PENNSYLVANIA CORPORATION AND GENERAL PARTNER OF GAMBONE SWAMP PIKE, L.P., CERTIFY THAT THE SAID LIMITED PARTNERSHIP IS THE REGISTERED OWNER OF THE LAND HEREON SUBDIVIDED, THAT THE SAID LIMITED PARTNERSHIP HEREBY ADOPTS THIS PLAN AND DESIRES THE SAME TO BE RECORDED.

MICHAEL GAMBONE, VICE PRESIDENT

CERTIFICATION OF NEW HANOVER TOWNSHIP AUTHORITY

AT THE MEETING HELD ON THIS _____ DAY OF _____, _____, NEW HANOVER TOWNSHIP AUTHORITY APPROVED THE SUBDIVISION / LAND DEVELOPMENT PLAN OF THE PROPERTY OF _____ AS SHOWN HEREON.

GREGORY RAPP, CHAIRMAN — ATTESTED: SECRETARY

SURVEYOR CERTIFICATION

I HEREBY CERTIFY THAT THIS PLAN REPRESENTS A SURVEY MADE BY ME, THAT THE MONUMENTS SHOWN HEREON EXIST AS LOCATED AND THAT ALL DIMENSIONAL DETAILS AREA CORRECT.

DATE — ROBERT M. CONRAD (SEAL)

This Plan amends previously approved "RECORD PLAN (3 of 5)" Plan Book 0039-00266, Dated 9-17-2013

TAX PARCEL INFORMATION: (AS RECORDED IN THE OFFICE FOR THE RECORDING OF DEEDS, ETC. IN AND FOR THE COUNTY OF MONTGOMERY)

TAX PARCEL NO. 47-00-05028-41-8
BLOCK 41F UNIT 115

RECORD OWNER/APPLICANT:
GAMBONE SWAMP PIKE, L.P.
1030 W. GERMANTOWN PIKE
P.O. BOX 287
FAIRVIEW VILLAGE, PA 19409

"FINAL"

GRAPHIC SCALE
30 0 30 60 90

NO.	DATE	DESCRIPTION	BY
8	1/9/17	REVISED PHASE "D"	JAS
7	11/9/15	REVISED PHASE "B"	JAS
6	8/12/14	REV MIDDLE CREEK ROAD	RMC
5	9/9/13	REV. PER TWP. ENG. COMMENTS	RMC
4	8/23/13	REV. PER TWP. ENG. LETTER DATED 7/31/13	JAS
3	8/24/13	REV. PER TWP. ENG. LETTERS DATED 1/3/13, 2/7/13	JAS
2	5/6/13	REV. AS PER NPDES MINOR REVISION	JAS
1	11/30/12	REV. AS PER TWP. ENG. LETTER DATED 6/6/12	JAS

RENNINGER PROPERTY SUBDIVISION

RECORD PLAN (3 of 5)

PREPARED FOR
GAMBONE SWAMP PIKE, L.P.
NEW HANOVER TOWNSHIP
MONTGOMERY COUNTY
PENNSYLVANIA

Chambers Associates, Inc.
Consulting Engineers and Surveyors
2962 Skippack Pike P.O. Box 678
Worcester, PA 19490-0678
484-991-8187

SCALE	DATE	JOB	DRAWING NO.
1"=30'	4-27-12	485-084	SHEET 6 of 54
MANAGER: JPH		DRAWN BY: JAS	

L:\PROJECTS\2012\12-485\dwg\SUBDIVISION SET OF PLANS 2-5-2013\12-485-6 PLAN& PLOTTED 7/11/2013 10:43 AM BY MICHAEL

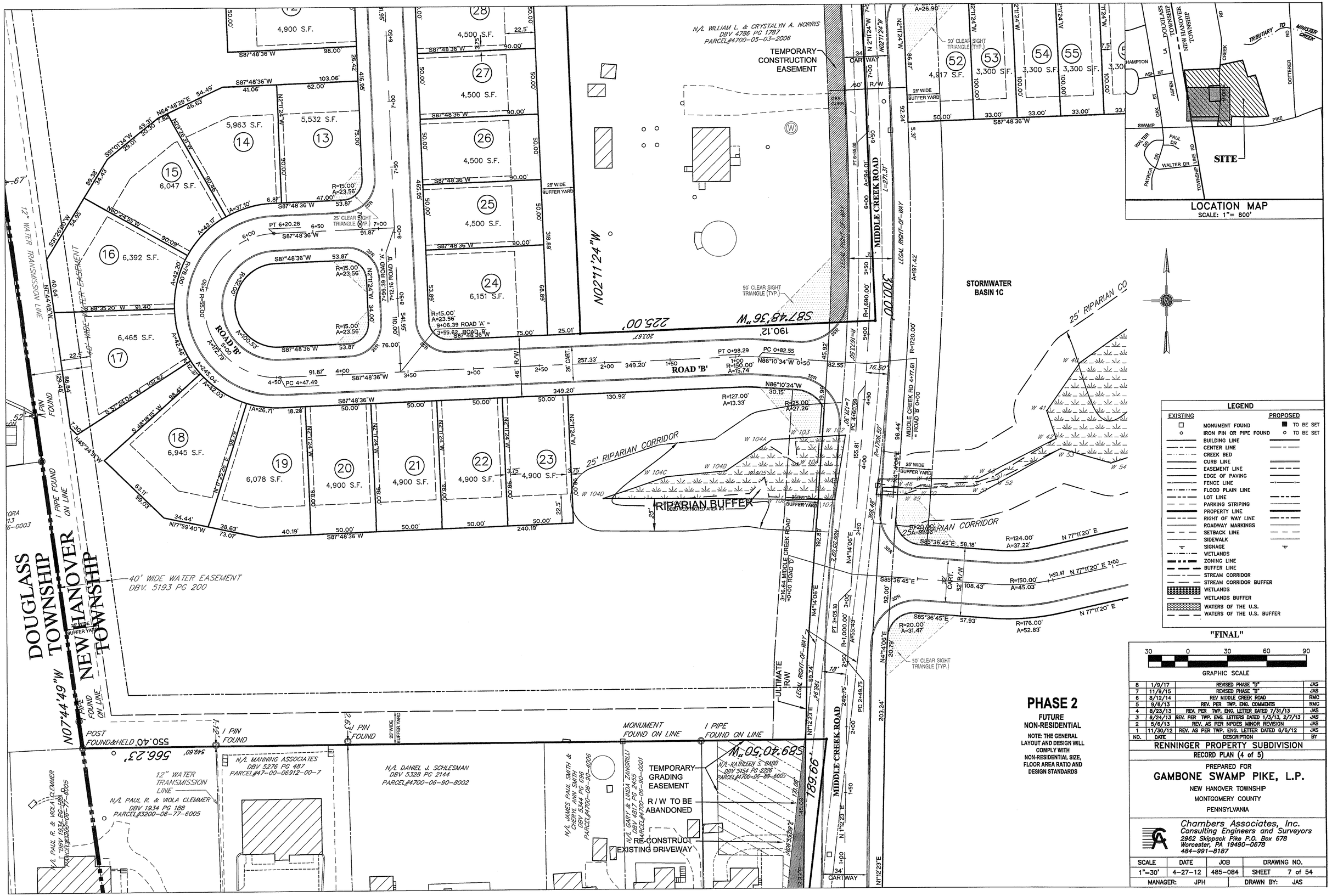

NO.	DATE	DESCRIPTION	BY
8	1/9/17	REVISED PHASE "D"	JAS
7	11/9/15	REVISED PHASE "B"	JAS
6	8/12/14	REV MIDDLE CREEK ROAD	RMC
5	9/6/13	REV. PER TWP. ENG. COMMENTS	RMC
4	8/23/13	REV. PER TWP. ENG. LETTER DATED 7/31/13	JAS
3	6/24/13	REV. PER TWP. ENG. LETTERS DATED 1/3/13, 2/7/13	JAS
2	5/6/13	REV. AS PER NPDES MINOR REVISION	JAS
1	11/30/12	REV. AS PER TWP. ENG. LETTER DATED 6/6/12	JAS

RENNINGER PROPERTY SUBDIVISION

RECORD PLAN (4 of 5)

PREPARED FOR

GAMBONE SWAMP PIKE, L.P.

NEW HANOVER TOWNSHIP
MONTGOMERY COUNTY
PENNSYLVANIA

Chambers Associates, Inc.
Consulting Engineers and Surveyors
2962 Skippack Pike P.O. Box 678
Worcester, PA 19490-0678
484-991-8187

SCALE	DATE	JOB	DRAWING NO.
1"=30'	4-27-12	485-084	SHEET 7 of 54
MANAGER: JPH		DRAWN BY: JAS	

L:\Projects\485084\Engineering\Subdivision\[SUBDIVISION SET OF PLANS 1-9-13-FOR BIDS 7-14-13-1-8.dwg, 7/1/2013 7:14:55 PM, Kevin Hammond]

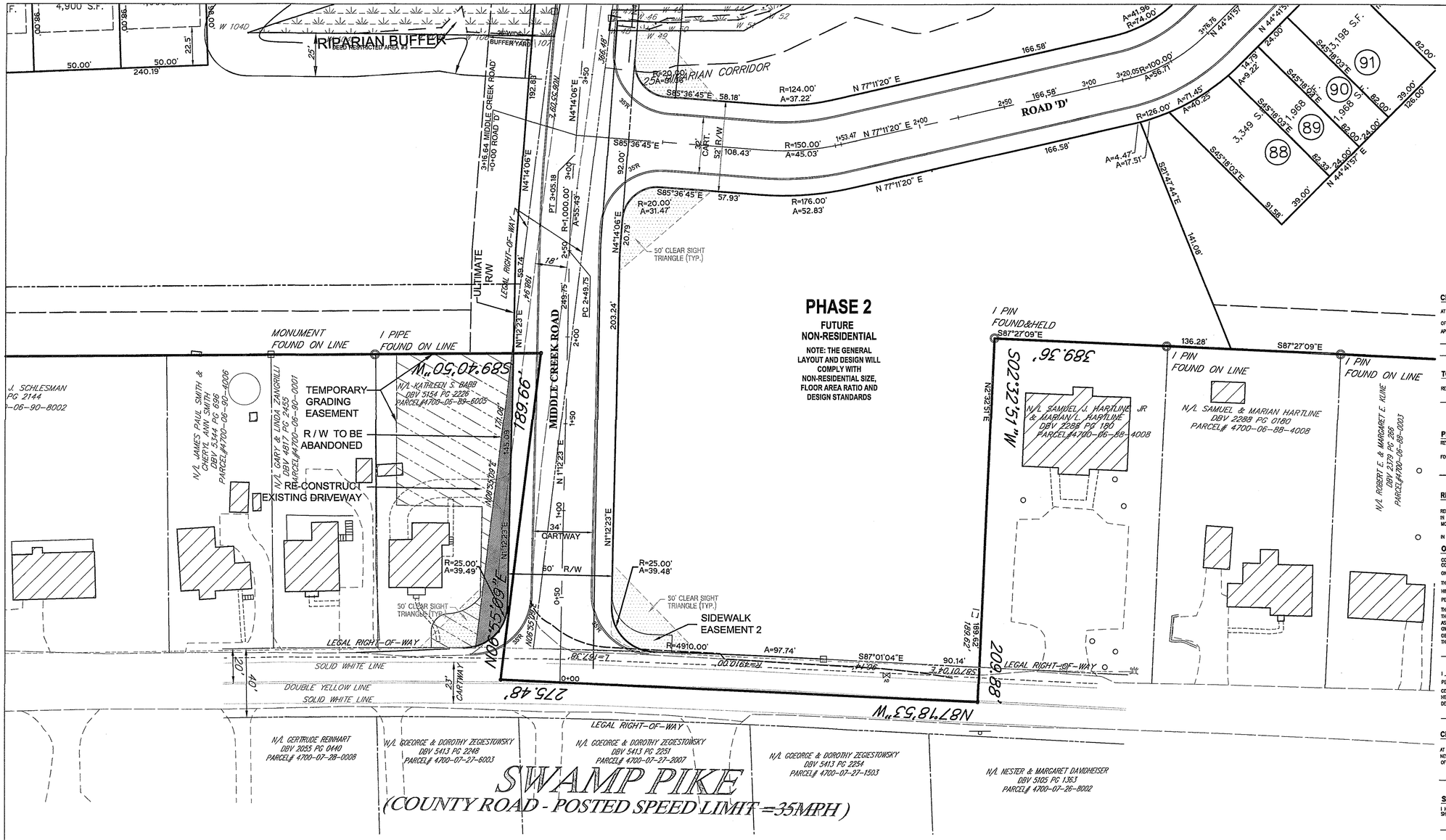

LEGEND

EXISTING		PROPOSED
□	MONUMENT FOUND	■ TO BE SET
o	IRON PIN OR PIPE FOUND	o TO BE SET
	BUILDING LINE	
	CENTER LINE	
	CREEK BED	
	CURB LINE	
	EASEMENT LINE	
	EDGE OF PAVING	
	FENCE LINE	
	FLOOD PLAIN LINE	
	LOT LINE	
	PARKING STRIPING	
	PROPERTY LINE	
	RIGHT OF WAY LINE	
	ROADWAY MARKINGS	
	SETBACK LINE	
	SIDEWALK	
⊲	SIGNAGE	⊲
	WETLANDS	
	ZONING LINE	
	BUFFER LINE	
	STREAM CORRIDOR	
	STREAM CORRIDOR BUFFER	
	WETLANDS	
	WETLANDS BUFFER	
	WATERS OF THE U.S.	
	WATERS OF THE U.S. BUFFER	

B2 - ATRIUM HOUSE
LOTS 76-115

	REQUIRED	ALLOWED	PROVIDED
LOT AREA MIN.	2,000 S.F.	1,500 S.F.***	1,500 S.F.
FRONT YARD (FROM R.O.W.) MINIMUM	N/A	0'	0'
MAXIMUM	N/A	20'	20'
SIDE YARD MIN.	N/A	N/A	0'
REAR YARD MIN.	N/A	N/A	0'
COURTYARD AREA MIN.	20% OF LOT AREA	20% OF LOT AREA	20%
COURTYARD DIMENSION MIN.	12'	12'	12'
LOT WIDTH MIN.	45'	24'*	24'
BLDG. HEIGHT MAX.	35'	35'	35'
BUILDING COVERAGE MAX.	65%	N/A	65%
IMPERVIOUS COVERAGE MAX.	N/A	See Below**	

* AS PER SECTION 27-805B(4).1, 60% OF THE REQUIREMENT OF THE PERMITTED USE.
** AS PER SECTION 27-805B(4).1, THE AREA COVERED BY IMPERVIOUS SURFACES (i.e., areas covered by buildings, pavement) SHALL BE MINIMIZED TO THE GREATEST EXTENT PRACTICABLE; BEST PRACTICES FOR SURFACE WATER MANAGEMENT SHALL BE REQUIRED.
*** AS PER SECTION 27-805B(4).1, 75% OF THE REQUIREMENT OF THE PERMITTED USE.

This Plan amends previously approved "RECORD PLAN (5 of 5)" Plan Book 0039-00266, Dated 9-17-2013

TAX PARCEL INFORMATION: (AS RECORDED IN THE OFFICE FOR THE RECORDING OF DEEDS, ETC. IN AND FOR THE COUNTY OF MONTGOMERY)

TAX PARCEL NO. 47-00-05028-41-8
BLOCK 41F UNIT 115

RECORD OWNER/APPLICANT:
GAMBONE SWAMP PIKE, L.P.
1030 W. GERMANTOWN PIKE
P.O. BOX 287
FAIRVIEW VILLAGE, PA. 19409

CERTIFICATION OF TOWNSHIP APPROVAL

AT THE MEETING HELD ON _____, THE BOARD OF SUPERVISORS OF NEW HANOVER TOWNSHIP BY RESOLUTION _____, DULY ENACTED AND APPROVED THE SUBDIVISION / LAND DEVELOPMENT PLAN OF THE PROPERTY OF _____ AS SHOWN HEREON.

PHILIP AGUANO, CHAIRMAN — ATTESTED: SECRETARY

TOWNSHIP ENGINEER CERTIFICATION

REVIEWED BY THE TOWNSHIP ENGINEER ON THE _____ DAY OF _____, _____.

DAVID LEH, TOWNSHIP ENGINEER

PLANNING COMMISSION CERTIFICATION

REVIEWED BY THE NEW HANOVER TOWNSHIP PLANNING COMMISSION AND RECOMMENDED FOR APPROVAL ON THIS _____ DAY OF _____, _____.

SUSAN SMITH, CHAIRWOMAN — ATTESTED: SECRETARY

RECORDING CERTIFICATE

RECORDED THIS _____ DAY OF _____, _____, IN THE OFFICE FOR THE RECORDING OF DEEDS, ETC., IN AND FOR THE COUNTY OF MONTGOMERY OF NORRISTOWN, PENNSYLVANIA.

IN PLAN FILE CASE _____ D.B. NO _____, PAGE _____.

OWNER'S ACKNOWLEDGMENT

COMMONWEALTH OF PENNSYLVANIA
COUNTY OF MONTGOMERY

ON THE _____ DAY OF _____ A.D., _____, BEFORE ME, THE UNDERSIGNED OFFICER, PERSONALLY APPEARED MICHAEL GAMBONE WHO ACKNOWLEDGED HIMSELF/HERSELF TO BE THE VICE PRESIDENT OF GAMBONE SWAMP PIKE INC., A PENNSYLVANIA CORPORATION AND GENERAL PARTNER OF GAMBONE SWAMP PIKE L.P., AND THAT HE/SHE AS SUCH VICE PRESIDENT, BEING AUTHORIZED TO DO SO, EXECUTED THE FOREGOING PLAN BY SIGNING THE NAME OF SAID CORPORATION BY HIMSELF/HERSELF AS THAT SAID CORPORATION IS THE GENERAL PARTNER OF GAMBONE SWAMP PIKE, L.P., OWNER OF THE DESIGNATED LAND, THAT ALL NECESSARY APPROVAL OF THE PLAN HAS BEEN OBTAINED AND IS ENDORSED THEREON AND THAT THE SAID LIMITED PARTNERSHIP DESIRES THAT THE FOREGOING PLAN MAY BE DULY RECORDED.

NOTARY PUBLIC — MY COMMISSION EXPIRES

I MICHAEL GAMBONE OF GAMBONE SWAMP PIKE, INC., A PENNSYLVANIA CORPORATION AND GENERAL PARTNER OF GAMBONE SWAMP PIKE L.P., CERTIFY THAT THE SAID LIMITED PARTNERSHIP IS THE REGISTERED OWNER OF THE LAND HEREIN SUBDIVIDED, THAT THE SAID LIMITED PARTNERSHIP HEREBY ADOPTS THIS PLAN AND DESIRES THE SAME TO BE RECORDED.

MICHAEL GAMBONE — VICE PRESIDENT

CERTIFICATION OF NEW HANOVER TOWNSHIP AUTHORITY

AT THE MEETING HELD ON THIS _____ DAY OF _____, _____, NEW HANOVER TOWNSHIP AUTHORITY APPROVED THE SUBDIVISION / LAND DEVELOPMENT PLAN OF THE PROPERTY OF _____ AS SHOWN HEREON.

GREGORY RAPP, CHAIRMAN — ATTESTED: SECRETARY

SURVEYOR CERTIFICATION

I HEREBY CERTIFY THAT THIS PLAN REPRESENTS A SURVEY MADE BY ME, THAT THE MONUMENTS SHOWN HEREON EXIST AS LOCATED AND THAT ALL DIMENSIONAL DETAILS AREA CORRECT.

DATE — ROBERT M. CONRAD (SEAL)

"FINAL"

30 0 30 60 90
GRAPHIC SCALE

NO.	DATE	DESCRIPTION	BY
8	1/9/17	REVISED PHASE "D"	JAS
7	11/9/15	REVISED PHASE "B"	JAS
6	8/12/14	REV MIDDLE CREEK ROAD	RMC
5	9/6/13	REV. PER TWP. ENG. COMMENTS	RMC
4	8/23/13	REV. PER TWP. ENG. LETTER DATED 7/31/13	JAS
3	8/24/13	REV. PER TWP. ENG. LETTERS DATED 1/3/13, 2/7/13	JAS
2	5/6/13	REV. AS PER NPDES MINOR REVISION	JAS
1	11/30/12	REV. AS PER TWP. ENG. LETTER DATED 6/6/12	JAS

RENNINGER PROPERTY SUBDIVISION

RECORD PLAN (5 of 5)

PREPARED FOR

GAMBONE SWAMP PIKE, L.P.

NEW HANOVER TOWNSHIP
MONTGOMERY COUNTY
PENNSYLVANIA

Chambers Associates, Inc.
Consulting Engineers and Surveyors
2982 Skippack Pike P.O. Box 678
Worcester, PA 19490-0678
484-991-8187

SCALE	DATE	JOB	DRAWING NO.
1"=30'	4-27-12	485-084	SHEET 8 of 54
MANAGER: JPH		DRAWN BY: JAS	

L:\Projects\485084\LD\Submissions\SUBMISSION SET OF PLANS (+ PROJECT)\1 4-8-13 5-6 Final_5_12\8/2017 11:53:39 AM, BROWN HP DESIGNJET T610

1,428,768 S.F./32.8 AC. (NET AREA TO R/W LINE)

TOTAL AREA OF REGULATED WETLANDS ON SITE 29,717 S.F./0.682 AC.
TOTAL AREA OF REGULATED WATERS ON SITE 4,367 S.F./0.100 AC.
TOTAL LENGTH OF REGULATED WATERS ON SITE 411 L.F.

1. STREAM PROGRESSION TO THE NEAREST NAVIGABLE WATERS OF THE UNITED STATES FROM SITE IS: "UNNAMED TRIBUTARY TO MINISTER CREEK"- MINISTER CREEK - SWAMP CREEK - PERKIOMEN CREEK - SCHUYLKILL RIVER.

2. SUBSEQUENT TO A SITE VISIT TO EVALUATE THE EXISTING VEGETATION, IT HAS BEEN DETERMINED THAT "WOODLANDS", AS DEFINED IN THE NEW HANOVER TOWNSHIP ZONING ORDINANCE, DO NOT OCCUR ON THIS SITE. AREAS CALLED OUT AS "EXISTING WOODLINE" ON PREVIOUS PLAN ARE PREDOMINATELY 6"-8" EASTERN REDCEDAR (JUNIPERUS VIRGINIANA) WHICH MEASURE LESS THAN 6" DBH. SOLITARY TREES OF NOTE OCCUR IN HEDGEROWS AT THE PROPERTY PERIMETER, AND ARE BEING PRESEVED TO THE EXTENT POSSIBLE. IN SUMMARY, NO WOODLAN DISTURBANCE IS BEING CAUSED BY THIS SUBDIVISION.

NOTES:

1. CONTRACTOR SHALL VERIFY ALL DEMOLITION AND SALVAGEABLE MATERIAL WITH THE OWNER PRIOR TO PROCEEDING. ALL SALVAGEABLE MATERIAL SHALL BE THE PROPERTY OF THE OWNER UNLESS OTHERWISE DIRECTED.
2. ALL DEMOLTION OF BUILDINGS, ROADS, AND THE REMOVAL OF MATERIALS SHALL BE DONE IN ACCORDANCE WITH THE LATEST STANDARDS AND SPECIFICATIONS OF DEP.
3. THE DEMOLITION OF EXISTING UTILIES SHALL BE DONE IN ACCORDANCE WITH THE LATEST STANDARDS AND SPECIFICATIONS OF THE NEW HANOVER TOWNSHIP AUTHORITY OR GOVERNING AGENCY.
4. BURYING OF TREES, STUMPS, OR CONSTRUCTION MATERIALS IS PROHIBITED. TREES AND STUMPS MAY BE CHIPPED OR GROUND AND SPREAD ON THE SITE.
5. TRANSITION BETWEEN EXISTING PAVEMENT AND PROPOSED PAVEMENTS SHALL BE SMOOTH IN BOTH HORIZONTAL AND VERTICAL ALIGNMENT. FIELD ADJUSTMENT MAY BE NECESSARY.

CALCULATION OF MATURE TREE DISTURBANCE
(MAXIMUM 40% DISTURBANCE ALLOWED)

EXISTING MATURE TREES	85
MATURE TREES TO BE REMOVED	31
TOTAL TREE DISTURBANCE	36.4%

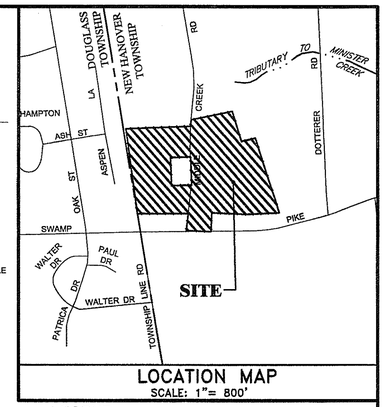

LOCATION MAP
SCALE: 1"= 800'

LEGEND

- EX. SANITARY SEWER MH
- EX. SANITARY SEWER
- EX. STORM MH.
- EX. STORM ENDWALL
- EX. STORM INLET
- EX. STORM SEWER
- EX. WATERMAIN
- EXISTING WOOD LINE
- EX. CONTOURS (200 / 202)
- EX. TREE
- EX. TREE TO BE REMOVED
- EX. TREES/ BRUSH TO BE REMOVED
- WATERS OF THE UNITED STATES, INCLUDING FEDERALLY REGULATED WETLANDS
- WATERS OF THE UNITED STATES
- EX. STREET LIGHT
- EX. FIRE HYDRANT
- SOILS (AbA, SeB)
- ZONING BOUNDARY
- MUNICIPAL BOUNDARY
- SLANTED TEXT DENOTES EX. FEATURE
- EX. WELL LOCATION

"FINAL"

80 0 80 160 240
GRAPHIC SCALE

NO.	DATE	DESCRIPTION	BY
8	1/9/17	REVISED PHASE "D"	JAS
7	11/9/15	REVISED PHASE "D"	JAS
6	8/12/14	REV MIDDLE CREEK ROAD	RMC
5	9/6/13	REV. PER TWP. ENG. COMMENTS	RMC
4	8/23/13	REV. PER TWP. ENG. LETTER DATED 7/31/13	JAS
3	6/24/13	REV. AS PER MCCD LETTER DATED 6/20/13	JAS
2	5/6/13	REV. AS PER NPDES MINOR REVISION	JAS
1	11/30/12	REV. AS PER TWP. ENG. LETTER DATED 6/6/12	JAS

RENNINGER PROPERTY SUBDIVISION
OVERALL EXISTING FEATURES PLAN

PREPARED FOR
GAMBONE SWAMP PIKE, L.P.
NEW HANOVER TOWNSHIP
MONTGOMERY COUNTY
PENNSYLVANIA

Chambers Associates, Inc.
Consulting Engineers and Surveyors
2962 Skippack Pike P.O. Box 678
Worcester, PA 19490-0678
484-991-8187

SCALE	DATE	JOB	DRAWING NO.
1"=80'	4-27-12	485-084	SHEET 9 of 54
MANAGER: JPH		DRAWN BY: JAS	

ALL BRUSH AND TREES TO BE REMOVED IN LIMITS OF DISTURBANCE AREA UNLESS OTHERWISE NOTED

C:\Documents and Settings\jsmith\Desktop\485084\485084 SETUP PLANS 2-9-17\OVERALL.dwg, 1/10/2017 11:23:30 AM, EXCITYPE DWG23.PS

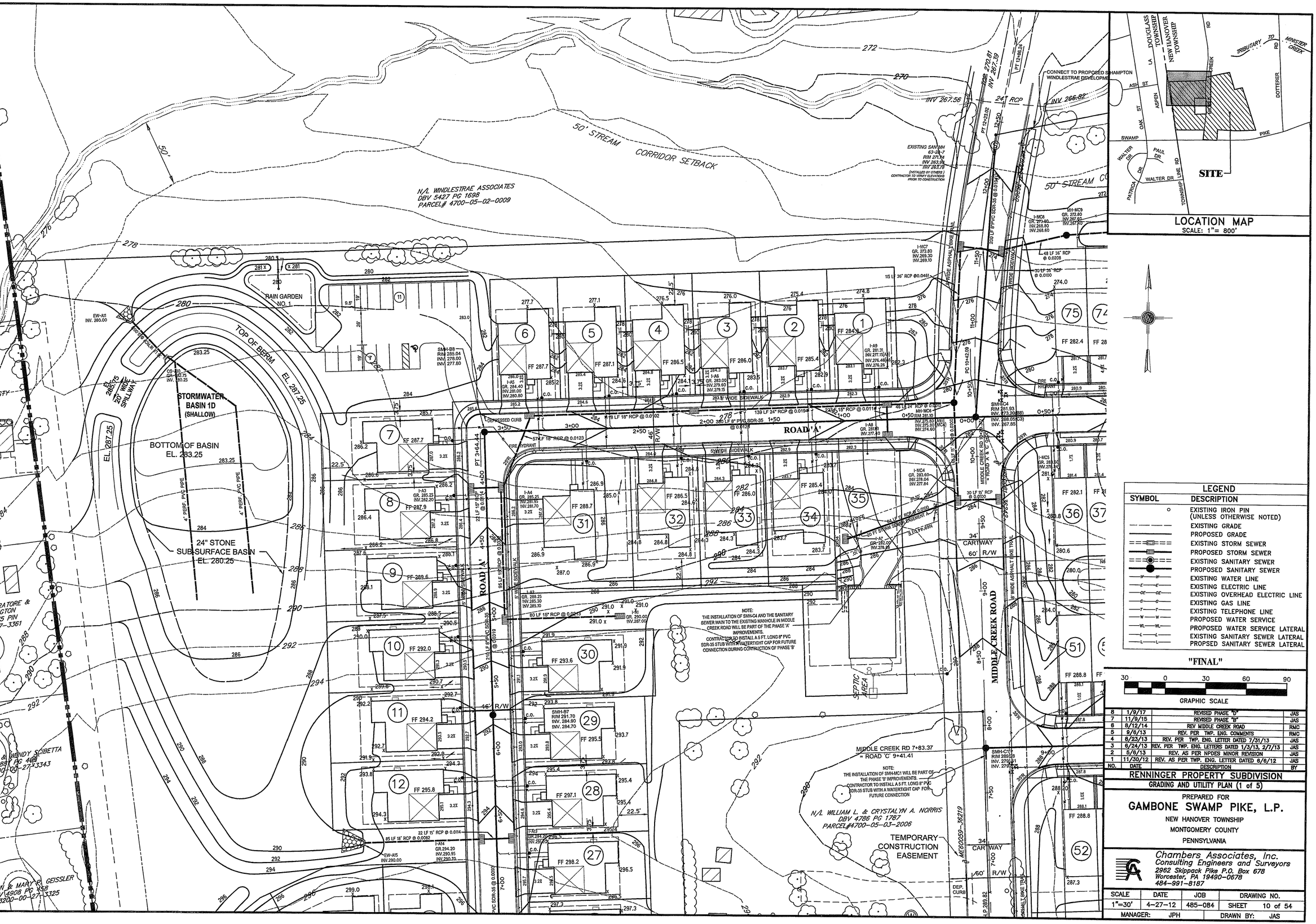

LOCATION MAP
SCALE: 1" = 800'

LEGEND

SYMBOL	DESCRIPTION
o	EXISTING IRON PIN (UNLESS OTHERWISE NOTED)
	EXISTING GRADE
	PROPOSED GRADE
	EXISTING STORM SEWER
	PROPOSED STORM SEWER
	EXISTING SANITARY SEWER
	PROPOSED SANITARY SEWER
W W	EXISTING WATER LINE
E E	EXISTING ELECTRIC LINE
OE OE	EXISTING OVERHEAD ELECTRIC LINE
G G	EXISTING GAS LINE
T T	EXISTING TELEPHONE LINE
W W	PROPOSED WATER SERVICE
WL WL	PROPOSED WATER SERVICE LATERAL
L L	EXISTING SANITARY SEWER LATERAL
L L	PROPSED SANITARY SEWER LATERAL

"FINAL"

30 0 30 60 90
GRAPHIC SCALE

NO.	DATE	DESCRIPTION	BY
8	1/9/17	REVISED PHASE "D"	JAS
7	11/9/15	REVISED PHASE "B"	JAS
6	8/12/14	REV. MIDDLE CREEK ROAD	RMC
5	9/6/13	REV. PER TWP. ENG. COMMENTS	RMC
4	8/23/13	REV. PER TWP. ENG. LETTER DATED 7/31/13	JAS
3	6/24/13	REV. PER TWP. ENG. LETTERS DATED 1/3/13, 2/7/13	JAS
2	5/6/13	REV. AS PER NPDES MINOR REVISION	JAS
1	11/30/12	REV. AS PER TWP. ENG. LETTER DATED 6/6/12	JAS

RENNINGER PROPERTY SUBDIVISION

GRADING AND UTILITY PLAN (1 of 5)

PREPARED FOR

GAMBONE SWAMP PIKE, L.P.

NEW HANOVER TOWNSHIP
MONTGOMERY COUNTY
PENNSYLVANIA

Chambers Associates, Inc.
Consulting Engineers and Surveyors
2962 Skippack Pike P.O. Box 678
Worcester, PA 19490-0678
484-991-8187

SCALE	DATE	JOB	DRAWING NO.
1"=30'	4-27-12	485-084	SHEET 10 of 54
MANAGER: JPH		DRAWN BY: JAS	

I:\CHAMBERS ASSOCIATES\PROJECTS\2012\485-084 RENNINGER SUBDIVISION\DWG\GRADING AND UTILITY PLANS 9-9-13\485-084 GRADING AND UTILITY PLANS 9-9-13.dwg, 8/1/2017 11:43:27 PM, JAS

STORMWATER BASIN 1A
BOTTOM OF BASIN EL. 264.50
PERMANENT POOL EL. 268.80
UNDERWATER BENCH EL. 269.70
TOP OF BERM= 273.50
33' WIDE SPILLWAY EL. 271.50
50' STREAM CORRIDOR SETBACK
25' RIPARIAN CORRIDOR
ROAD 'C'
MIDDLE CREEK ROAD
RAIN GARDEN NO. 2
RAIN GARDEN NO. 3
STORMWATER BASIN 1B
BOTTOM OF BASIN EL. 273.50
PERMANENT POOL EL. 276.50
UNDERWATER BENCH EL. 276.40
WETLAND MITIGATION AREA
DEED RESTRICTED AREA #1
DEED RESTRICTED AREA #4
N/L WINDLESTRAE ASSOCIATES DBV 5427 PG 1698 PARCEL# 4700-05-02-0009
N/L PAUL W. MOYER & SONS INC DBV 5196 PG 0280 PARCEL# 4700-01-11-0304
CONNECT TO PROPOSED SIDEWALK IN WINDLESTRAE DEVELOPMENT
STORMWATER FENCING SEE DETAIL SHEET 53
GATE
FIRE HYDRANT
ROAD 'C' STA 1+00 TO STA 7+00
MIDDLE CREEK RD STA 8+00 TO STA 10+00
PT 5+93.70
PT 3+47.70
PC 10+42.09
R/W
CARTWAY
DEP. CURB
ASPHALT BIKE TRAIL
5' WIDE SIDEWALK
8' WIDE ASPHALT BIKE TRAIL
RIP RAP
FIRE HYDRANT
SMH-C1 RIM 289.28 INV. 279.41 INV. 279.31
SMH-C2 RIM 288.85 INV. 275.60 INV. 275.50
SMH-C3 RIM 278.05 INV. 270.00 INV. 269.80
SMH-C4 RIM 281.93 INV. 273.20 (SB) INV. 268.05 (C3) INV. 267.85
MH-C4 GR. 277.45 INV. 272.20 (C7) INV. 271.80 (C3) INV. 271.20
MH-MC9 GR. 272.80 INV. 267.60 INV. 267.40
I-MC8 GR. 273.40 INV. 268.80 INV. 268.60
I-MC5 GR. 283.80 INV. 278.30
I-C1 GR. 284.90 INV. 282.15
I-C2 GR. 284.50 INV. 281.95
I-C3 GR. 286.05 INV. 281.10
I-C4 GR. 285.20 INV. 280.50
I-C5 GR. 274.25 INV. 271.25
I-C6 GR. 279.10 INV. 278.10
I-C7 GR. 277.50 INV. 274.50
EW-C20 INV. 268.70
OS-C19 EW INV. 268.60
EW-MC10 INV. 264.10
EW-C15 INV. 270.35
EW-C16 INV. 271.05
EW-D20 INV. 276.76
OS-D20 INV. 277.05
EW-D1 INV 276.50
EW-E8 INV. 280.60
SMH-D1 RIM 293 INV. 286 INV. 284
200 LF 8"PVC SDR-35 @ 0.0195
348 LF 8" PVC SDR-35 @ 0.0101
345 LF 8"PVC SDR-35
246 LF 8"PVC SDR-35 @ 0.0229
150 LF 24" RCP @ 0.0050
120 LF 18" RCP @ 0.0053
78 LF 18" RCP @ 0.0078
48 LF 36" RCP @ 0.0208
30 LF 36" RCP @ 0.0100
98 LF 36" RCP @ 0.0100
62 LF 15" RCP @ 0.0056
40 LF 18" RCP @ 0.0100
20 LF 15" RCP @ 0.0100
12 LF 24" RCP @ 0.0200
12 LF 15" RCP @ 0.0208
30 LF 15" RCP @ 0.0100
28 LF 15" RCP @ 0.0107
24 LF 15" RCP @ 0.0104
15 LF 30" RCP @ 0.0267
15 LF 24"RCP @ 0.0070
22 LF 15" RCP @ 0.0077
STORM SEWER EASEMENT C
30 FEET WIDE STORM SEWER EASEMENT
LOCATION MAP
SCALE: 1"= 800'
TRIBUTARY TO MINISTER CREEK
DOUGLASS TOWNSHIP
NEW HANOVER TOWNSHIP
HAMPTON
ASH ST
ASPEN
OAK ST
SWAMP
PIKE
DOTTERER
WALTER DR
PAUL DR
PATRICK DR
TOWNSHIP LINE RD
SITE
LEGEND
SYMBOL DESCRIPTION
EXISTING IRON PIN (UNLESS OTHERWISE NOTED)
EXISTING GRADE
PROPOSED GRADE
EXISTING STORM SEWER
PROPOSED STORM SEWER
EXISTING SANITARY SEWER
PROPOSED SANITARY SEWER
EXISTING WATER LINE
EXISTING ELECTRIC LINE
EXISTING OVERHEAD ELECTRIC LINE
EXISTING GAS LINE
EXISTING TELEPHONE LINE
PROPOSED WATER SERVICE
PROPOSED WATER SERVICE LATERAL
EXISTING SANITARY SEWER LATERAL
PROPSED SANITARY SEWER LATERAL
"FINAL"
30 0 30 60 90
GRAPHIC SCALE
8 1/8/17 REVISED PHASE "D" JAS
7 11/9/15 REVISED PHASE "B" JAS
6 8/12/14 REV MIDDLE CREEK ROAD RMC
5 9/6/13 REV. PER TWP. ENG. COMMENTS RMC
4 8/23/13 REV. PER TWP. ENG. LETTER DATED 7/31/13 JAS
3 6/24/13 REV. PER TWP. ENG. LETTERS DATED 1/3/13, 2/7/13 JAS
2 5/5/13 REV. AS PER NPDES MINOR REVISION JAS
1 11/30/12 REV. AS PER TWP. ENG. LETTER DATED 6/6/12 JAS
NO. DATE DESCRIPTION BY
RENNINGER PROPERTY SUBDIVISION
GRADING AND UTILITY PLAN (2 of 5)
PREPARED FOR
GAMBONE SWAMP PIKE, L.P.
NEW HANOVER TOWNSHIP
MONTGOMERY COUNTY
PENNSYLVANIA
Chambers Associates, Inc.
Consulting Engineers and Surveyors
2962 Skippack Pike P.O. Box 678
Worcester, PA 19490-0678
484-991-8187
SCALE 1"=30' DATE 4-27-12 JOB 485-084 DRAWING NO. SHEET 11 of 54
MANAGER: JPH DRAWN BY: JAS

LOCATION MAP
SCALE: 1"= 800'

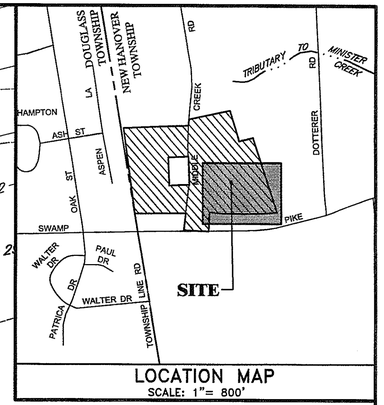

LEGEND

SYMBOL	DESCRIPTION
o	EXISTING IRON PIN (UNLESS OTHERWISE NOTED)
	EXISTING GRADE
	PROPOSED GRADE
	EXISTING STORM SEWER
	PROPOSED STORM SEWER
	EXISTING SANITARY SEWER
	PROPOSED SANITARY SEWER
W W	EXISTING WATER LINE
E E	EXISTING ELECTRIC LINE
OE OE	EXISTING OVERHEAD ELECTRIC LINE
G G	EXISTING GAS LINE
T T	EXISTING TELEPHONE LINE
W W	PROPOSED WATER SERVICE
WL WL	PROPOSED WATER SERVICE LATERAL
L L	EXISTING SANITARY SEWER LATERAL
L L	PROPSED SANITARY SEWER LATERAL

"FINAL"

GRAPHIC SCALE 30 0 30 60 90

NO.	DATE	DESCRIPTION	BY
8	1/9/17	REVISED PHASE "D"	JAS
7	11/9/15	REVISED PHASE "B"	JAS
6	8/12/14	REV. MIDDLE CREEK ROAD	RMC
5	9/6/13	REV. PER TWP. ENG. COMMENTS	RMC
4	8/23/13	REV. PER TWP. ENG. LETTER DATED 7/31/13	JAS
3	6/24/13	REV. PER TWP. ENG. LETTERS DATED 1/3/13, 2/7/13	JAS
2	5/6/13	REV. AS PER NPDES MINOR REVISION	JAS
1	11/30/12	REV. AS PER TWP. ENG. LETTER DATED 6/6/12	JAS

RENNINGER PROPERTY SUBDIVISION
GRADING AND UTILITY PLAN (3 of 5)

PREPARED FOR
GAMBONE SWAMP PIKE, L.P.
NEW HANOVER TOWNSHIP
MONTGOMERY COUNTY
PENNSYLVANIA

Chambers Associates, Inc.
Consulting Engineers and Surveyors
2962 Skippack Pike P.O. Box 678
Worcester, PA 19490-0678
484-991-8187

SCALE	DATE	JOB	DRAWING NO.
1"=30'	4-27-12	485-084	SHEET 12 of 54
MANAGER: JPH		DRAWN BY: JAS	

PHASE 2
FUTURE
RESIDENTIAL

E: THE GENERAL
AND DESIGN WILL
OMPLY WITH
ESIDENTIAL SIZE,
AREA RATIO AND
GN STANDARDS

L:\Projects\485084\2015-Submissions\REVISIONS\8 SET OF PLANS 8-17\SHEETS 33-54.dwg, 8/1/2017 12:53:24 PM, 1:\DOCS\DWG\PLOTSTYLES\ACAD.CTB

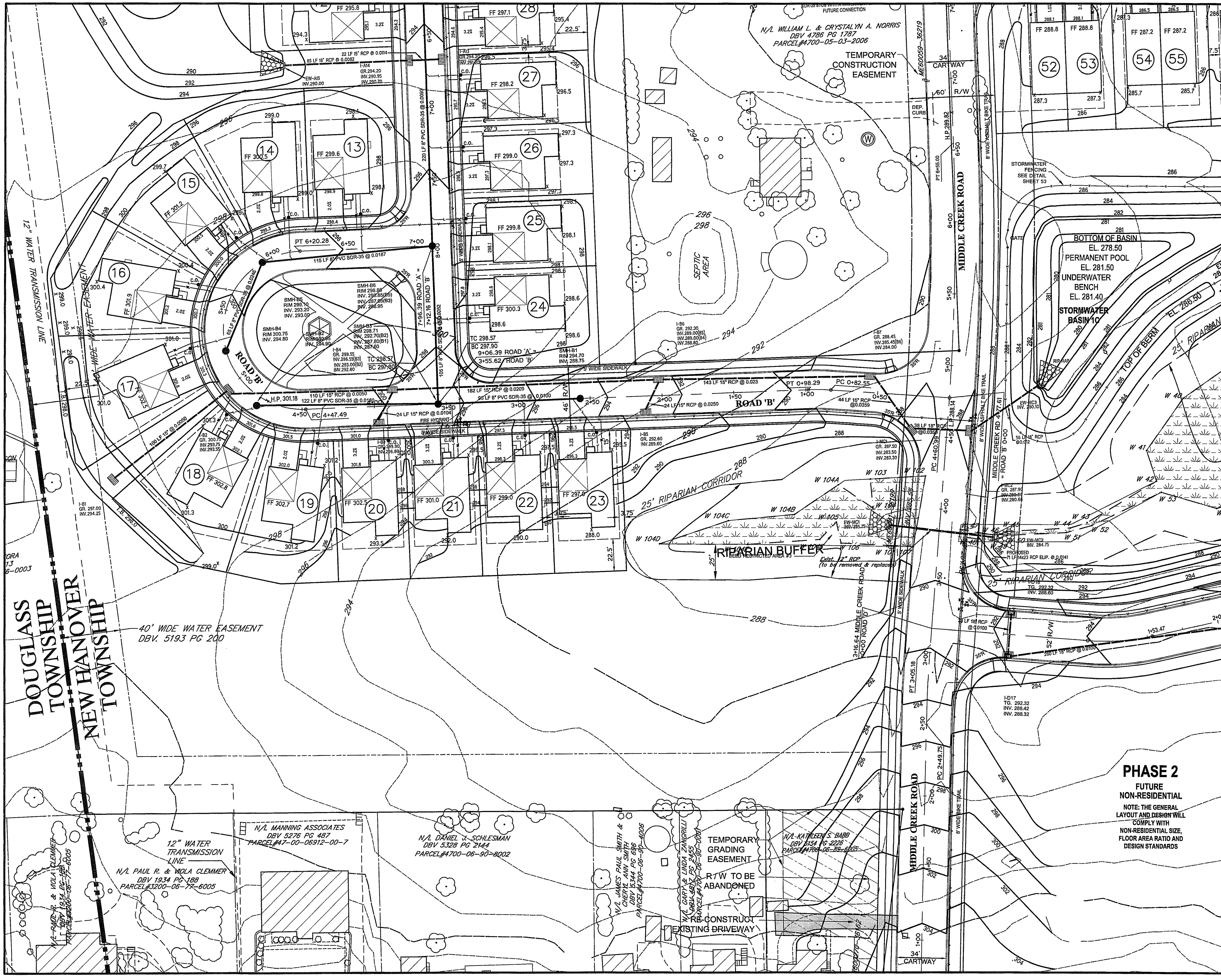

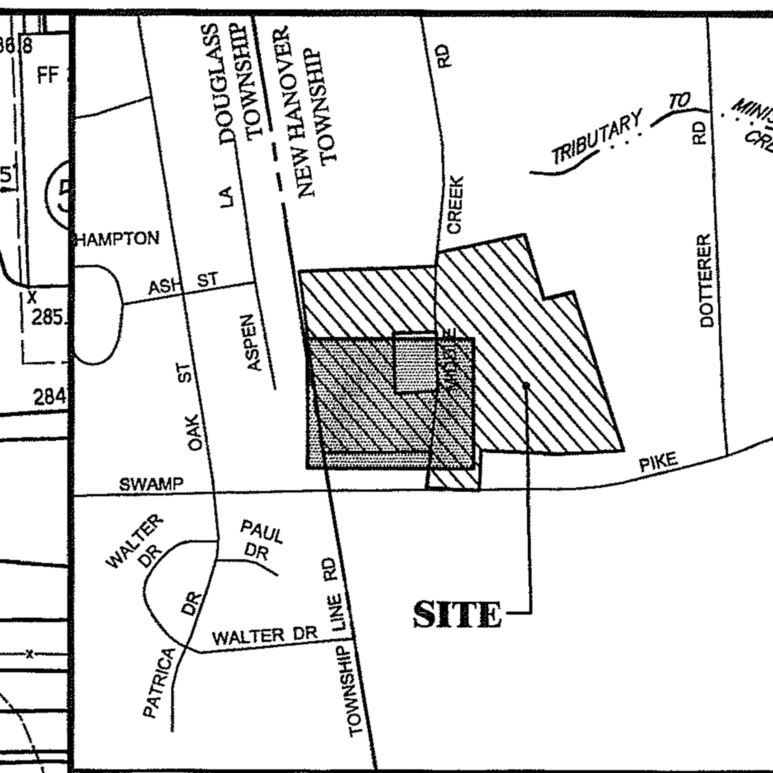

LOCATION MAP
SCALE: 1"= 800'

LEGEND	
SYMBOL	DESCRIPTION
o	EXISTING IRON PIN (UNLESS OTHERWISE NOTED)
	EXISTING GRADE
	PROPOSED GRADE
	EXISTING STORM SEWER
	PROPOSED STORM SEWER
	EXISTING SANITARY SEWER
	PROPOSED SANITARY SEWER
—W—W—	EXISTING WATER LINE
—E—E—	EXISTING ELECTRIC LINE
—OE—OE—	EXISTING OVERHEAD ELECTRIC LINE
—G—G—	EXISTING GAS LINE
—T—T—	EXISTING TELEPHONE LINE
—W—W—	PROPOSED WATER SERVICE
—WL—WL—	PROPOSED WATER SERVICE LATERAL
—L—L—	EXISTING SANITARY SEWER LATERAL
—L—L—	PROPSED SANITARY SEWER LATERAL

"FINAL"

GRAPHIC SCALE: 30 0 30 60 90

NO.	DATE	DESCRIPTION	BY
8	1/9/17	REVISED PHASE "D"	JAS
7	11/9/15	REVISED PHASE "B"	JAS
6	8/12/14	REV MIDDLE CREEK ROAD	RMC
5	9/6/13	REV. PER TWP. ENG. COMMENTS	RMC
4	8/23/13	REV. PER TWP. ENG. LETTER DATED 7/31/13	JAS
3	6/24/13	REV. PER TWP. ENG. LETTERS DATED 1/3/13, 2/7/13	JAS
2	5/6/13	REV. AS PER NPDES MINOR REVISION	JAS
1	11/30/12	REV. AS PER TWP. ENG. LETTER DATED 6/6/12	JAS

RENNINGER PROPERTY SUBDIVISION

GRADING AND UTILITY PLAN (4 of 5)

PREPARED FOR
GAMBONE SWAMP PIKE, L.P.
NEW HANOVER TOWNSHIP
MONTGOMERY COUNTY
PENNSYLVANIA

Chambers Associates, Inc.
Consulting Engineers and Surveyors
2962 Skippack Pike P.O. Box 678
Worcester, PA 19490-0678
484-991-8187

SCALE	DATE	JOB	DRAWING NO.
1"=30'	4-27-12	485-084	SHEET 13 of 54
MANAGER: JPH		DRAWN BY: JAS	

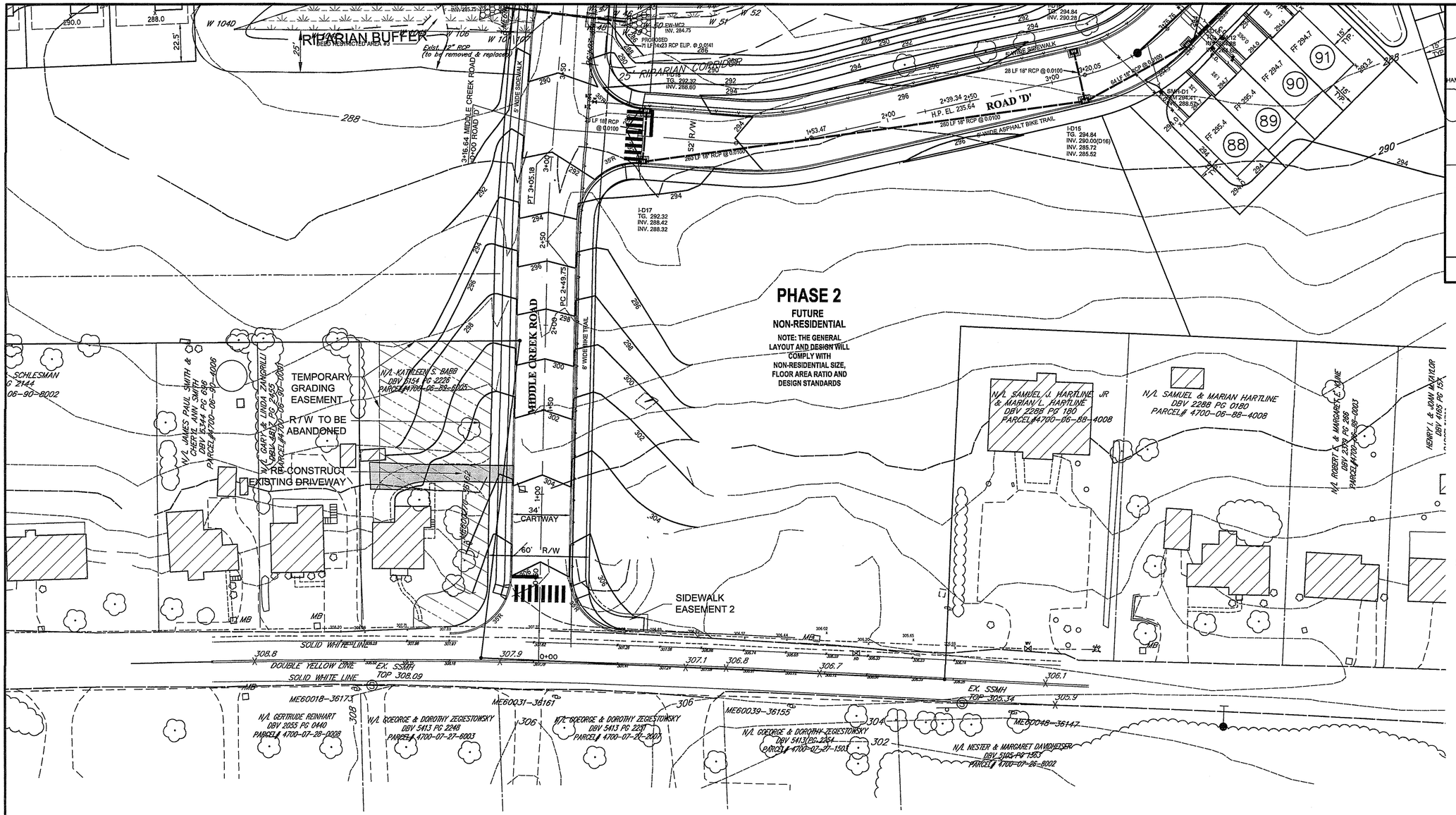

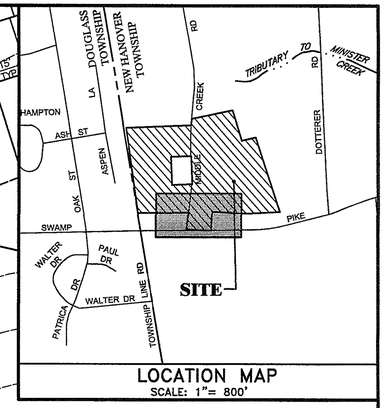

LOCATION MAP
SCALE: 1"= 800'

GENERAL NOTE:
1. ALL PEDESTRIAN CROSSWALKS, LEGENDS, STOP BARS, LONG LINES AND SHORT LINES ON BITUMINOUS PAVING SHALL BE COMPRISED OF HOT THERMOPLASTIC PAVEMENT MARKINGS.

LEGEND	
SYMBOL	DESCRIPTION
○	EXISTING IRON PIN (UNLESS OTHERWISE NOTED)
	EXISTING GRADE
	PROPOSED GRADE
	EXISTING STORM SEWER
	PROPOSED STORM SEWER
	EXISTING SANITARY SEWER
	PROPOSED SANITARY SEWER
W W	EXISTING WATER LINE
E E	EXISTING ELECTRIC LINE
OE OE	EXISTING OVERHEAD ELECTRIC LINE
G G	EXISTING GAS LINE
T T	EXISTING TELEPHONE LINE
W W	PROPOSED WATER SERVICE
WL WL	PROPOSED WATER SERVICE LATERAL
L L	EXISTING SANITARY SEWER LATERAL
L L	PROPSED SANITARY SEWER LATERAL

"FINAL"

30 0 30 60 90
GRAPHIC SCALE

NO.	DATE	DESCRIPTION	BY
8	1/9/17	REVISED PHASE "D"	JAS
7	11/9/15	REVISED PHASE "D"	JAS
6	8/12/14	REV MIDDLE CREEK ROAD	RMC
5	9/6/13	REV. PER TWP. ENG. COMMENTS	RMC
4	8/23/13	REV. PER TWP. ENG. LETTER DATED 7/31/13	JAS
3	6/24/13	REV. PER TWP. ENG. LETTERS DATED 1/3/13, 2/7/13	JAS
2	5/6/13	REV. AS PER NPDES MINOR REVISION	JAS
1	11/30/12	REV. AS PER TWP. ENG. LETTER DATED 6/6/12	JAS

RENNINGER PROPERTY SUBDIVISION

GRADING AND UTILITY PLAN (5 of 5)

PREPARED FOR
GAMBONE SWAMP PIKE, L.P.
NEW HANOVER TOWNSHIP
MONTGOMERY COUNTY
PENNSYLVANIA

Chambers Associates, Inc.
Consulting Engineers and Surveyors
2962 Skippack Pike P.O. Box 678
Worcester, PA 19490-0678
484-991-8187

SCALE	DATE	JOB	DRAWING NO.
1"=30'	4-27-12	485-084	SHEET 14 of 54
MANAGER: JPH		DRAWN BY: JAS	

L:\Projects\2012\485-084\Plan\Working\SUBMISSION SET OF PLANS 1-9-17\SHEETS 2016.dwg, 1/9/2017 2:25:26 PM, KATHY MCGUIGAN

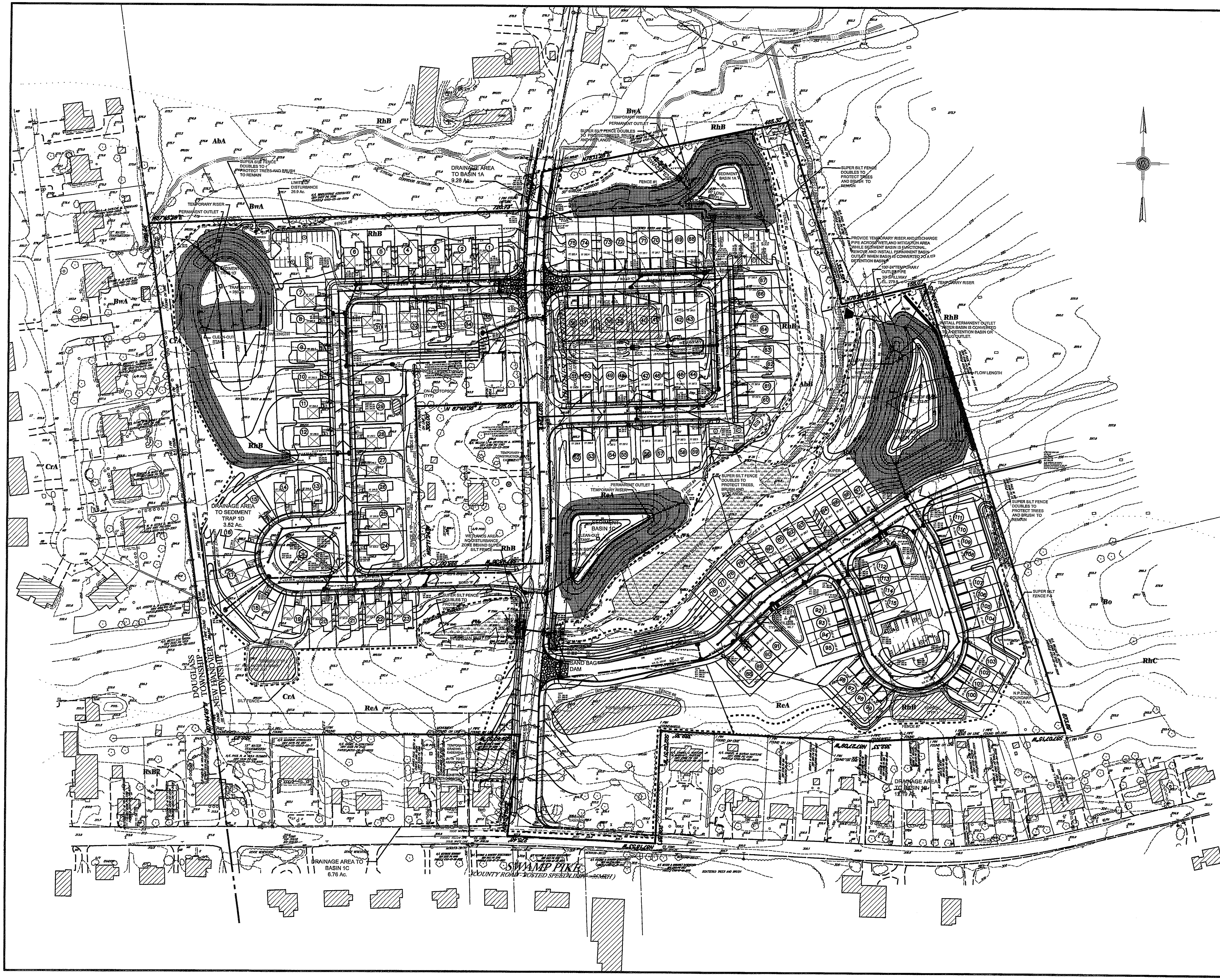

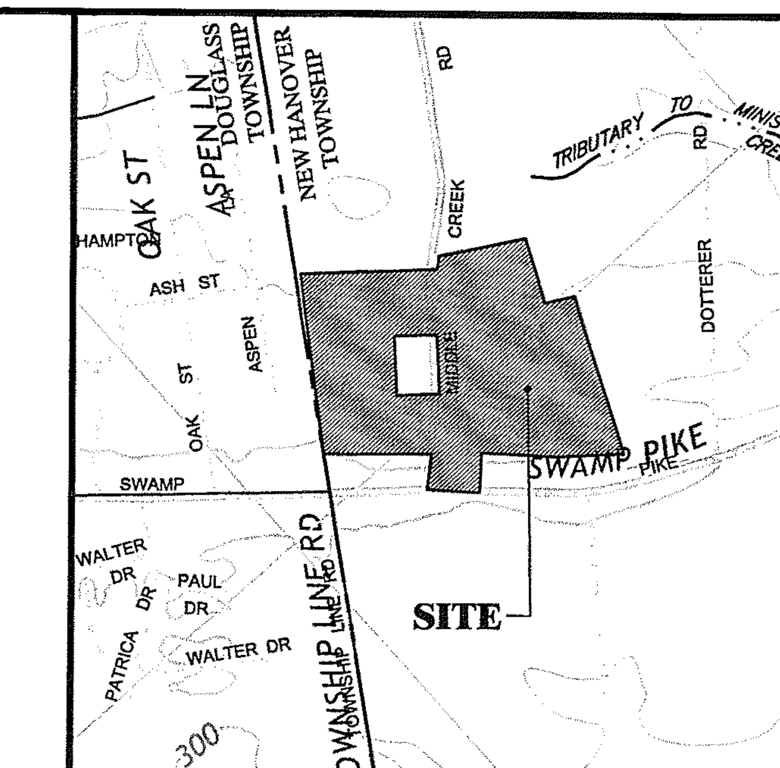

U.S.G.S. QUADRANGLE
LANSDALE
1" = 800'

LEGEND

SYMBOL	DESCRIPTION
	EXISTING WOOD LINE
	EXISTING TREE
	FIRE HYDRANT
W.V.	WATER VALVE
G.V.	GAS VALVE
	ENDWALL
	MANHOLE
	SIGNS
	EXISTING IRON PIN (UNLESS OTHERWISE NOTED)
	EXISTING GRADE
	PROPOSED GRADE
	EXISTING STORM SEWER
	PROPOSED STORM SEWER
	EXISTING SANITARY SEWER
	PROPOSED SANITARY SEWER
L	EXISTING SANITARY SEWER LATERAL
L	PROPSED SANITARY SEWER LATERAL
W	EXISTING WATER LINE
W	PROPOSED WATER SERVICE
WL	PROPOSED WATER SERVICE LATERAL
E	EXISTING ELECTRIC LINE
OE	EXISTING OVERHEAD ELECTRIC LINE
G	EXISTING GAS LINE
T	EXISTING TELEPHONE LINE
	WETLANDS LINE
	WATERS OF THE U.S. LINE
	SOIL LINE
GeC3	SOIL TYPE
	EROSION CONTROL BLANKET
	CONSTRUCTION ENTRANCE
	TREE PROTECTION
	LIMIT OF DISTURBANCE
18-SF	STANDARD SILT FENCE
30-SF	REINFORCED SILT FENCE
SSF	SUPER SILT FENCE
	LIMIT OF NPDES
	BASIN DRAINAGE AREA
	TOPSOIL STOCK PILE
123.5x x123.5	SPOT ELEVATION
	FILTREXX SOCK FILTER
	INLET PROTECTION
	SAND BAG DAM
	RIP-RAP
	ROCK FILTER
	WETLANDS
	WATERS OF THE U.S.

"FINAL"

80 0 80 160 240

GRAPHIC SCALE

NO.	DATE	DESCRIPTION	BY
8	1/9/17	REVISED PHASE "D"	JAS
7	11/9/15	REVISED PHASE "B"	JAS
6	8/12/14	REV MIDDLE CREEK ROAD	RMC
5	9/6/13	REV. PER TWP. ENG. COMMENTS	RMC
4	8/23/13	REV. PER TWP. ENG. LETTER DATED 7/31/13	JAS
3	6/24/13	REV. AS PER MCCD LETTER DATED 6/20/13	JAS
2	5/6/13	REV. AS PER NPDES MINOR REVISION	JAS
1	11/30/12	REV. AS PER TWP. ENG. LETTER DATED 6/6/12	JAS

RENNINGER PROPERTY SUBDIVISION

OVERALL EROSION AND SEDIMENT CONTROL PLAN

PREPARED FOR

GAMBONE SWAMP PIKE, L.P.

NEW HANOVER TOWNSHIP
MONTGOMERY COUNTY
PENNSYLVANIA

Chambers Associates, Inc.
Consulting Engineers and Surveyors
2962 Skippack Pike P.O. Box 678
Worcester, PA 19490-0678
484-991-8187

SCALE	DATE	JOB	DRAWING NO.
1"=80'	4-27-12	485-084	SHEET 15 of 54
MANAGER: JPH			DRAWN BY: JAS

AbA

BwA

RhB

CrA

SUPER SILT FENCE DOUBLES TO PROTECT TREES AND BRUSH TO REMAIN

LIMITS OF DISTURBANCE 26.9 Ac.

DRAINAGE AREA TO BASIN 1A 9.28 Ac.

50' STREAM CORRIDOR SETBACK

TEMPORARY RISER

PERMANENT OUTLET

SEDIMENT TRAP 1D

TRAP BOTTOM = 280.25

RAIN GARDEN #3

CLEAN-OUT STAKE

FLOW LENGTH 421'

ROAD 'A'

MIDDLE CREEK ROAD

FENCE #9

FENCE #11

FENCE #12

SCATTERED TREES & BRUSH

ON-LOT TOPSOIL (TYP)

INFILTRATION TRENCH TYPICAL

TEMPORARY CONSTRUCTION EASEMENT

N87°45'28"E 959.98'

N 87°48'36" E 225.00'

S 02°11'24" E 420.73'

N 87°45'28" W 720.73'

I PIN FOUND ON LINE

I PIPE FOUND ON LINE 300.00'

I PIN FOUND 4.30'

I PIN FOUND 6.42'

I PIN FOUND ON LINE

N/L WINDLESTRAE ASSOCIATES DBV 5427 PG 1698 PARCEL# 4700-05-02-0009

N/L GREGORY D. SERRATORE & ANNA L. HARRISTON DBV 5205 PG 2475 PIN #3200-00-27-3361

N/L DAVID POOL & WENDY SCIBETTA DBV 4891 PG 469 PARCEL #3200-00-27-3343

N/L GORDON & MARY E. GEISSLER DBV 4908 PG 458 PARCEL #3200-00-27-3325

N/L WILLIAM L. & CRYSTALYN A. NORRIS DBV 4786 PG 1787 PARCEL #4700-05-03-2006

N/L JANET M. CHRISTY PG 2482 22-3388

SUPER SILT FENCE DOUBLES TO PROTECT TREES AND BRUSH TO REMAIN

BRUSH

SCRUB

A/C POOL

FIRE HYDRANT

DEPRESSED CURB

SWAMP PIKE

MIDDLE CREEK ROAD

U.S.G.S. QUADRANGLE
LANSDALE
1" = 800'

SITE

ASPETUCK TOWNSHIP

NEW HANOVER TOWNSHIP

TRIBUTARY MINISTER CREEK

DOTTERER RD

OAK ST

ASH ST

ASPEN ST

HAMPTON DR

SWAMP

WALTER DR

PAUL DR

PATRICIA DR

TOWNSHIP LINE RD

300

LEGEND

SYMBOL	DESCRIPTION
	EXISTING WOOD LINE
	EXISTING TREE
	FIRE HYDRANT
	WATER VALVE
	GAS VALVE
	ENDWALL
	MANHOLE
	SIGNS
	EXISTING IRON PIN (UNLESS OTHERWISE NOTED)
	EXISTING GRADE
	PROPOSED GRADE
	EXISTING STORM SEWER
	PROPOSED STORM SEWER
	EXISTING SANITARY SEWER
	PROPOSED SANITARY SEWER
	EXISTING SANITARY SEWER LATERAL
	PROPSED SANITARY SEWER LATERAL
	EXISTING WATER LINE
	PROPOSED WATER SERVICE
	PROPOSED WATER SERVICE LATERAL
	EXISTING ELECTRIC LINE
	EXISTING OVERHEAD ELECTRIC LINE
	EXISTING GAS LINE
	EXISTING TELEPHONE LINE
	WETLANDS LINE
	WATERS OF THE U.S. LINE
GeC3	SOIL LINE
	SOIL TYPE
	EROSION CONTROL BLANKET
	CONSTRUCTION ENTRANCE
	TREE PROTECTION
	LIMIT OF DISTURBANCE
15'-SF	STANDARD SILT FENCE
10'-SF	REINFORCED SILT FENCE
SSF	SUPER SILT FENCE
	LIMIT OF NPDES
	BASIN DRAINAGE AREA
	TOPSOIL STOCK PILE
123.5x x123.5	SPOT ELEVATION
	FILTREXX SOCK FILTER
	INLET PROTECTION
	SAND BAG DAM
	RIP-RAP
	ROCK FILTER
	WETLANDS
	WATERS OF THE U.S.

"FINAL"

30 0 30 60 90
GRAPHIC SCALE

NO.	DATE	DESCRIPTION	BY
8	1/9/17	REVISED PHASE "D"	JAS
7	11/9/15	REVISED PHASE "B"	JAS
6	8/12/14	REV MIDDLE CREEK ROAD	RMC
5	9/6/13	REV. PER TWP. ENG. COMMENTS	RMC
4	8/23/13	REV. PER TWP. ENG. LETTER DATED 7/31/13	JAS
3	6/24/13	REV. AS PER MCCD LETTER DATED 6/20/13	JAS
2	5/6/13	REV. AS PER NPDES MINOR REVISION	JAS
1	11/30/12	REV. AS PER TWP. ENG. LETTER DATED 6/6/12	JAS

RENNINGER PROPERTY SUBDIVISION

EROSION AND SEDIMENT CONTROL PLAN (1 of 5)

PREPARED FOR
GAMBONE SWAMP PIKE, L.P.
NEW HANOVER TOWNSHIP
MONTGOMERY COUNTY
PENNSYLVANIA

Chambers Associates, Inc.
Consulting Engineers and Surveyors
2962 Skippack Pike P.O. Box 678
Worcester, PA 19490-0678
484-991-8187

SCALE	DATE	JOB	DRAWING NO.
1"=30'	4-27-12	485-084	SHEET 16 of 54
MANAGER: JPH		DRAWN BY: JAS	

TEMPORARY RISER
PERMANENT OUTLET
SUPER SILT FENCE DOUBLES TO PROTECT TREES, BRUSH AND WETLANDS
DEED RESTRICTED AREA #1
RhB
465.30'
S17°03'43"E
N78°11'28"E
SWALE 'E'
FENCE #1
50' STREAM CORRIDOR SETBACK
SCATTERED TREES AND BRUSH
SEDIMENT BASIN 1A
90' LONG BAFFLE
97'
105'
RIP RAP
BASIN BOTTOM = 265.00
FENCE #2
25' RIPARIAN CORRIDOR
IRON PIN FOUND & HELD
SUPER SILT FENCE DOUBLES TO PROTECT TREES AND BRUSH TO REMAIN
N/L PAUL W. MOYER & SONS INC. DBV 5786 PG 0328 PARCEL# 4700-01-11-0304
PROVIDE TEMPORARY RISER AND DISCHARGE PIPE ACROSS WETLAND MITIGATION AREA WHILE SEDIMENT BASIN IS FUNCTIONAL. REMOVE AND INSTALL PERMANENT BASIN OUTLET WHEN BASIN IS CONVERTED TO A DETENTION BASIN.
100'-24"TEMPORARY OUTLET PIPE
30' SPILLWAY EL. 279.9
TEMPORARY RISER
158.07
S17°43'48"E
N76°24'39"E
353.58
ROAD 'C'
TOPSOIL (TYP.)
RAIN GARDEN NO. 2
RAIN GARDEN NO. 3
MIDDLE CREEK ROAD
S02°W
FENCE #10
30 FEET WIDE STORM SEWER EASEMENT
STORM SEWER EASEMENT C-1
DEED RESTRICTED AREA #2
AbB
RcA
BRUSH
CLEAN-OUT STAKES
WETLAND MITIGATION AREA
CLEAN-OUT STAKE
BOTTOM OF BASIN EL. 273.50
SEDIMENT BASIN 1B
FILTREXX SOCK FILTER
SUPER SILT
RhB
INSTALL PERMANENT OUTLET AFTER BASIN IS CONVERTED TO A DETENTION BASIN OR PLUG OUTLET.
FLOW LENGTH
"FINAL"

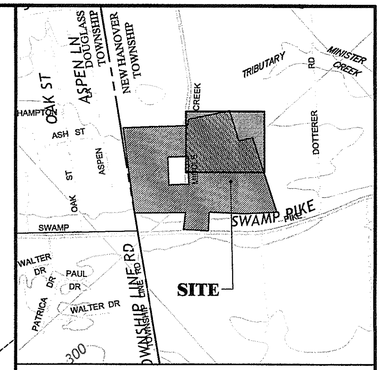

U.S.G.S. QUADRANGLE
LANSDALE
1" = 800'

LEGEND

SYMBOL	DESCRIPTION
	EXISTING WOOD LINE
	EXISTING TREE
	FIRE HYDRANT
WV	WATER VALVE
GV	GAS VALVE
	ENDWALL
	MANHOLE
	SIGNS
	EXISTING IRON PIN (UNLESS OTHERWISE NOTED)
	EXISTING GRADE
	PROPOSED GRADE
	EXISTING STORM SEWER
	PROPOSED STORM SEWER
	EXISTING SANITARY SEWER
	PROPOSED SANITARY SEWER
	EXISTING SANITARY SEWER LATERAL
	PROPSED SANITARY SEWER LATERAL
	EXISTING WATER LINE
	PROPOSED WATER SERVICE
	PROPOSED WATER SERVICE LATERAL
	EXISTING ELECTRIC LINE
	EXISTING OVERHEAD ELECTRIC LINE
	EXISTING GAS LINE
	EXISTING TELEPHONE LINE
	WETLANDS LINE
	WATERS OF THE U.S. LINE
GeC3	SOIL LINE SOIL TYPE
	EROSION CONTROL BLANKET
	CONSTRUCTION ENTRANCE
	TREE PROTECTION
	LIMIT OF DISTURBANCE
18-SF	STANDARD SILT FENCE
20-SF	REINFORCED SILT FENCE
SSF	SUPER SILT FENCE
	LIMIT OF NPDES
	BASIN DRAINAGE AREA
	TOPSOIL STOCK PILE
123.5x x123.5	SPOT ELEVATION
	FILTREXX SOCK FILTER
	INLET PROTECTION
	SAND BAG DAM
	RIP-RAP
	ROCK FILTER
	WETLANDS
	WATERS OF THE U.S.

30 0 30 60 90
GRAPHIC SCALE

NO.	DATE	DESCRIPTION	BY
8	1/9/17	REVISED PHASE "D"	JAS
7	11/9/15	REVISED PHASE "B"	JAS
6	8/12/14	REV MIDDLE CREEK ROAD	RMC
5	9/6/13	REV. PER TWP. ENG. COMMENTS	RMC
4	8/23/13	REV. PER TWP. ENG. LETTER DATED 7/31/13	JAS
3	6/24/13	REV. AS PER MCCD LETTER DATED 6/20/13	JAS
2	5/6/13	REV. AS PER NPDES MINOR REVISION	JAS
1	11/30/12	REV. AS PER TWP. ENG. LETTER DATED 6/6/12	JAS

RENNINGER PROPERTY SUBDIVISION
EROSION AND SEDIMENT CONTROL PLAN (2 of 5)

PREPARED FOR
GAMBONE SWAMP PIKE, L.P.
NEW HANOVER TOWNSHIP
MONTGOMERY COUNTY
PENNSYLVANIA

Chambers Associates, Inc.
Consulting Engineers and Surveyors
2962 Skippack Pike P.O. Box 678
Worcester, PA 19490-0678
484-991-8187

SCALE	DATE	JOB	DRAWING NO.
1"=30'	4-27-12	485-084	SHEET 17 of 54
MANAGER: JPH		DRAWN BY: JAS	

I:\Projects\485084\SSI-SoilWaterQ&E\485084_ESPC1.MAP 8.5 x 11(PLOTS 1:1.5) Aug 31, 2017(08:27:33 PM) by JASON

SUPER SILT FENCE DOUBLES TO PROTECT TREES, BRUSH AND WETLANDS

SUPER SILT FENCE

SUPER SILT FENCE DOUBLES TO PROTECT TREES AND BRUSH TO REMAIN

SUPER SILT FENCE F-5

PERMANENT OUTLET

RY RISER

A

ENT

1C

FENCE #4

FENCE #12

FENCE #6

FENCE #7

RIPARIAN BUFFER

BASIN 1B

FILTREXX SOCK FILTER

INLET FILTER TYPICAL

RAIN GARDEN NO. 7

RAIN GARDEN NO. 5

RAIN GARDEN NO. 6

ROAD 'D'

ROAD 'E'

ReA

RhB

TOPSOIL (TYP.)

OPSOIL (TYP.)

BENTONITE CLAY BACKFILL REQUIRED 3 FT IN EA. DIRECTION

DRAINAGE AREA TO BASIN 1B 12.19 Ac.

N.P.D.E.S. BOUNDARY 32.6 Ac.

N/L SAMUEL J. HARTLINE JR & MARIAN L. HARTLINE DBV 2288 PG 160 PARCEL#4700-06-88-4008

N/L SAMUEL & MARIAN HARTLINE DBV 2288 PG 0180 PARCEL# 4700-06-88-4008

N/L ROBERT L. & MARGARET L. LANE DBV 2376 PG 366 PARCEL#4700-06-86-0003

HENRY I. & JOAN M. HOFFLICH DBV 4165 PG 157 PARCEL#4700-06-87-8007

N/L DOUGLAS M. MASSIMO DBV 5403 PG 709 PARCEL#4700-06-86-8005

N/L JEFFREY S. BENNER DBV 5414 PG 1113 PARCEL#4700-06-86-0005

N/L DOROTHY R. HEROT CHARLES L. & DBV 5431 PG 386 PARCEL#4700-06-86-8009

N/L MARGARET JEAN HEGEMAN DBV 5102 PG 2595 PARCEL#4700-06-84-2004

N/L FRANK M. & PATRICIA L. ROHRBACH DBV 4780 PG 2403 PARCEL#4700-06-84-8008

N/L SHEILA L. MILLER DBV 5220 PG 1422 PARCEL# 4700-06-84-8007

N/L WILLIAM E. & JACOBS DBV 5586 PG 0201 PARCEL# 4700-06-12-2006

N/L PAUL W. HAMPTON DBV 5186 PG 0201 PARCEL# 4700-06-12-2001

EXISTING SAN MH 63-19.43 RIM 292.19 INV. 284.28 INV 284.08 TO BE INSTALLED (BY OTHERS) PRIOR TO THE INSTALLATION OF UPSTREAM IMPROVEMENTS ON THIS SITE. CONTRACTOR TO VERIFY ELEVATIONS PRIOR TO CONSTRUCTION

SMH-E5 RIM 293.91 INV. 287.71 INV. 287.51

SMH-E4 RIM 291.57 INV. 286.6 INV. 286.41

SMH-E3 RIM 294.01 INV. 288.90

SMH-E2 RIM 293.56 INV. 288.45 INV. 288.25

SMH-D3 RIM 291.61 INV. 287.05 INV. 286.85

SMH-D2 RIM 293.16 INV. 287.91 INV. 287.71

SMH-D1 RIM 294.41 INV. 288.57

MH-D4 RIM 291.30 INV. 286.76(D4) INV. 279.90(D5) INV. 279.70

MH-D5 RIM 291.03 INV. 287.86 INV. 287.06

MH-D9 RIM 291.23 INV. 284.86(D9) INV. 281.90(D11) INV. 281.70

I-D7 TG 290.63 INV. 285.83

I-D9 TG 291.44 INV. 285.36 INV. 285.16

I-D10 TG 291.44 INV. 285.58

I-D11 TG. 292.13 INV. 282.84 INV. 282.64

I-D12 TG. 292.13 INV. 283.42

I-D15 TG. 294.84 INV. 290.00(D16) INV. 285.72 INV. 285.52

I-D16 TG. 294.84 INV. 290.28

I-D1 TG. 293.20 INV. 280.25

INV-E16 INV. 285.00

EW-B9 281.00

R/P RAP

12 LF 15" RCP @ 0.0208

28 LF 18" RCP @ 0.0100

72 LF 30" RCP @ 0.0100

74 LF 30" RCP @ 0.0100

66 LF 24" RCP @ 0.0100

102 LF 8" PVC SDR-35 @ 0.0100

84 LF 8" PVC SDR-35 @ 0.0100

120 LF 8" PVC SDR-35 @ 0.0100

165 LF 8" PVC SDR-35 @ 0.0050

98 LF 8" PVC SDR-35 @ 0.0050

162 LF 8" PVC SDR-35 @ 0.0050

260 LF 18" RCP @ 0.0100

8' WIDE ASPHALT BIKE TRAIL

8' WIDE SIDEWALK

6' WIDE SIDEWALK

I PIN FOUND&HELD

I PIN FOUND ON LINE

I PIPE FOUND&HELD

I PIPE FOUND

I PIPE FOUND ON LINE

S02°23'51"W 389.36'

N87°27'09"W 362.33'

S87°07'15"W 873.89'

U.S.G.S. QUADRANGLE LANSDALE 1" = 800'

SITE

ASPEN ST

OAK ST

ASH ST

HAMPTON DR

SWAMP PIKE

WALTER DR

PAUL DR

PATRICIA DR

DOTTERER

MINISTER CREEK

TRIBUTARY

MIDDLE CREEK

ASPETONG CLASS TOWNSHIP

NEW HANOVER TOWNSHIP

LEGEND

SYMBOL	DESCRIPTION
	EXISTING WOOD LINE
	EXISTING TREE
	FIRE HYDRANT
W.V.	WATER VALVE
G.V.	GAS VALVE
	ENDWALL
	MANHOLE
	SIGNS
o	EXISTING IRON PIN (UNLESS OTHERWISE NOTED)
	EXISTING GRADE
	PROPOSED GRADE
	EXISTING STORM SEWER
	PROPOSED STORM SEWER
	EXISTING SANITARY SEWER
	PROPOSED SANITARY SEWER
L L	EXISTING SANITARY SEWER LATERAL
L L	PROPSED SANITARY SEWER LATERAL
W W	EXISTING WATER LINE
W W	PROPOSED WATER SERVICE
W W	PROPOSED WATER SERVICE LATERAL
E E	EXISTING ELECTRIC LINE
OE OE	EXISTING OVERHEAD ELECTRIC LINE
G G	EXISTING GAS LINE
T T	EXISTING TELEPHONE LINE
	WETLANDS LINE
	WATERS OF THE U.S. LINE
	SOIL LINE
GeC3	SOIL TYPE
	EROSION CONTROL BLANKET
	CONSTRUCTION ENTRANCE
	TREE PROTECTION
	LIMIT OF DISTURBANCE
18 SF	STANDARD SILT FENCE
30 SF	REINFORCED SILT FENCE
SSF	SUPER SILT FENCE
	LIMIT OF NPDES
	BASIN DRAINAGE AREA
	TOPSOIL STOCK PILE
123.5x	SPOT ELEVATION
	FILTREXX SOCK FILTER
	INLET PROTECTION
	SAND BAG DAM
	RIP-RAP
	ROCK FILTER
	WETLANDS
	WATERS OF THE U.S.

"FINAL"

30 0 30 60 90

GRAPHIC SCALE

NO.	DATE	DESCRIPTION	BY
8	1/9/17	REVISED PHASE "D"	JAS
7	11/9/15	REVISED PHASE "B"	JAS
6	8/12/14	REV MIDDLE CREEK ROAD	RMC
5	8/6/13	REV. PER TWP. ENG. COMMENTS	RMC
4	8/23/13	REV. PER TWP. ENG. LETTER DATED 7/31/13	JAS
3	6/24/13	REV. AS PER MCCD LETTER DATED 6/20/13	JAS
2	5/6/13	REV. AS PER NPDES MINOR REVISION	JAS
1	11/30/12	REV. AS PER TWP. ENG. LETTER DATED 6/6/12	JAS

RENNINGER PROPERTY SUBDIVISION

EROSION AND SEDIMENT CONTROL PLAN (3 of 5)

PREPARED FOR

GAMBONE SWAMP PIKE, L.P.

NEW HANOVER TOWNSHIP

MONTGOMERY COUNTY

PENNSYLVANIA

Chambers Associates, Inc.
Consulting Engineers and Surveyors
2962 Skippack Pike P.O. Box 678
Worcester, PA 19490-0678
484-991-8167

SCALE	DATE	JOB	DRAWING NO.
1"=30'	4-27-12	485-084	SHEET 18 of 54
MANAGER: JPH		DRAWN BY: JAS	

L:\Projects\485\dgn\construction\SEDIMENT SET OF PLANS (4-27-12).dwg, 18, 1/20/2017 10:44:56 PM, RICOH MP C4503(G3) PS

DRAINAGE AREA TO SEDIMENT TRAP 1D 3.52 Ac.

SEDIMENT BASIN 1C

CLEAN-OUT STAKE

BASIN BOTTOM 280.00

WETLANDS AREA NO DISTURBANCE ZONE BEHIND SUPER SILT FENCE

SUPER SILT FENCE DOUBLES TO PROTECT WETLANDS

TEMPORARY CONSTRUCTION EASEMENT

PERMANENT OUTL

TEMPORARY RISER

SAND BAG DAM

TOPSOIL (TYP.)

SILT FENCE

RIPARIAN BUFFER

RIPARIAN CORRIDOR

TEMPORARY GRADING EASEMENT

R/W TO BE ABANDONED

RE-CONSTRUCT EXISTING DRIVEWAY

MONUMENT FOUND ON LINE

I PIPE FOUND ON LINE

I PIN FOUND

I POST FOUND/HELD

40' WIDE WATER EASEMENT DBV. 1793 PG 200

12" WATER TRANSMISSION LINE

FENCE #1

FENCE #2

FENCE #3

FENCE #4

FENCE #5

FENCE # 15

FENCE # 16

FENCE # 17

ROAD 'B'

MIDDLE CREEK ROAD

DOUGLASS TOWNSHIP

NEW HANOVER TOWNSHIP

N07°44'49"W 556.23'

N07°44'49"W 225.00'

N07°44'49"W 189.86'

N/L WILLIAM L. & CRYSTALYN A. NORRIS DBV 4786 PG 1787 PARCEL#4700-05-03-2006

N/L MANNING ASSOCIATES DBV 5276 PG 487 PARCEL#47-00-06912-00-7

N/L PAUL R. & VIOLA CLEMMER DBV 1934 PG 188 PARCEL#3200-06-72-6005

N/L DANIEL J. SCHLESMAN DBV 5328 PG 2444 PARCEL#4700-06-90-8002

N/L JAMES PAUL SMITH & CHERYL ANN SMITH DBV 5344 PG 696 PARCEL#4700-06-90-4006

N/L GARY A. & LINDA ZINGRILLI DBV 5415 PG 2455 PARCEL#4700-06-90-0001

N/L KATHLEEN S. BABB DBV 5154 PG 2226 PARCEL#4700-06-R1-6005

U.S.G.S. QUADRANGLE
LANSDALE
1" = 800'

LEGEND

SYMBOL	DESCRIPTION
	EXISTING WOOD LINE
	EXISTING TREE
	FIRE HYDRANT
W.V.	WATER VALVE
G.V.	GAS VALVE
	ENDWALL
	MANHOLE
	SIGNS
o	EXISTING IRON PIN (UNLESS OTHERWISE NOTED)
	EXISTING GRADE
	PROPOSED GRADE
	EXISTING STORM SEWER
	PROPOSED STORM SEWER
	EXISTING SANITARY SEWER
	PROPOSED SANITARY SEWER
	EXISTING SANITARY SEWER LATERAL
	PROPSED SANITARY SEWER LATERAL
	EXISTING WATER LINE
	PROPOSED WATER SERVICE
	PROPOSED WATER SERVICE LATERAL
	EXISTING ELECTRIC LINE
	EXISTING OVERHEAD ELECTRIC LINE
	EXISTING GAS LINE
	EXISTING TELEPHONE LINE
	WETLANDS LINE
	WATERS OF THE U.S. LINE
GeC3	SOIL LINE
	SOIL TYPE
	EROSION CONTROL BLANKET
	CONSTRUCTION ENTRANCE
	TREE PROTECTION
	LIMIT OF DISTURBANCE
6-SF	STANDARD SILT FENCE
10-SF	REINFORCED SILT FENCE
SSF	SUPER SILT FENCE
	LIMIT OF NPDES
	BASIN DRAINAGE AREA
	TOPSOIL STOCK PILE
123.5x x123.5	SPOT ELEVATION
	FILTREXX SOCK FILTER
IP	INLET PROTECTION
	SAND BAG DAM
	RIP-RAP
	ROCK FILTER
	WETLANDS
	WATERS OF THE U.S.

"FINAL"

GRAPHIC SCALE 30 0 30 60 90

NO.	DATE	DESCRIPTION	BY
8	1/9/17	REVISED PHASE "D"	JAS
7	11/9/15	REVISED PHASE "B"	JAS
6	8/12/14	REV MIDDLE CREEK ROAD	RMC
5	9/6/13	REV. PER TWP. ENG. COMMENTS	RMC
4	8/23/13	REV. PER TWP. ENG. LETTER DATED 7/31/13	JAS
3	6/24/13	REV. AS PER MCCD LETTER DATED 6/20/13	JAS
2	5/6/13	REV. AS PER NPDES MINOR REVISION	JAS
1	11/30/12	REV. AS PER TWP. ENG. LETTER DATED 6/6/12	JAS

RENNINGER PROPERTY SUBDIVISION

EROSION AND SEDIMENT CONTROL PLAN (4 of 5)

PREPARED FOR

GAMBONE SWAMP PIKE, L.P.

NEW HANOVER TOWNSHIP
MONTGOMERY COUNTY
PENNSYLVANIA

Chambers Associates, Inc.
Consulting Engineers and Surveyors
2962 Skippack Pike P.O. Box 678
Worcester, PA 19490-0678
484-991-8187

SCALE	DATE	JOB	DRAWING NO.
1"=30'	4-27-12	485-084	SHEET 19 of 54
MANAGER: JPH		DRAWN BY: JAS	

L:\Projects\485084\04-Submissions\SUBMISSION SET OF PLANS 1-9-2017\5 1-9-20.dwg, EL 1/7/2017 1:24:13 PM, JSOH AP DV2020.15

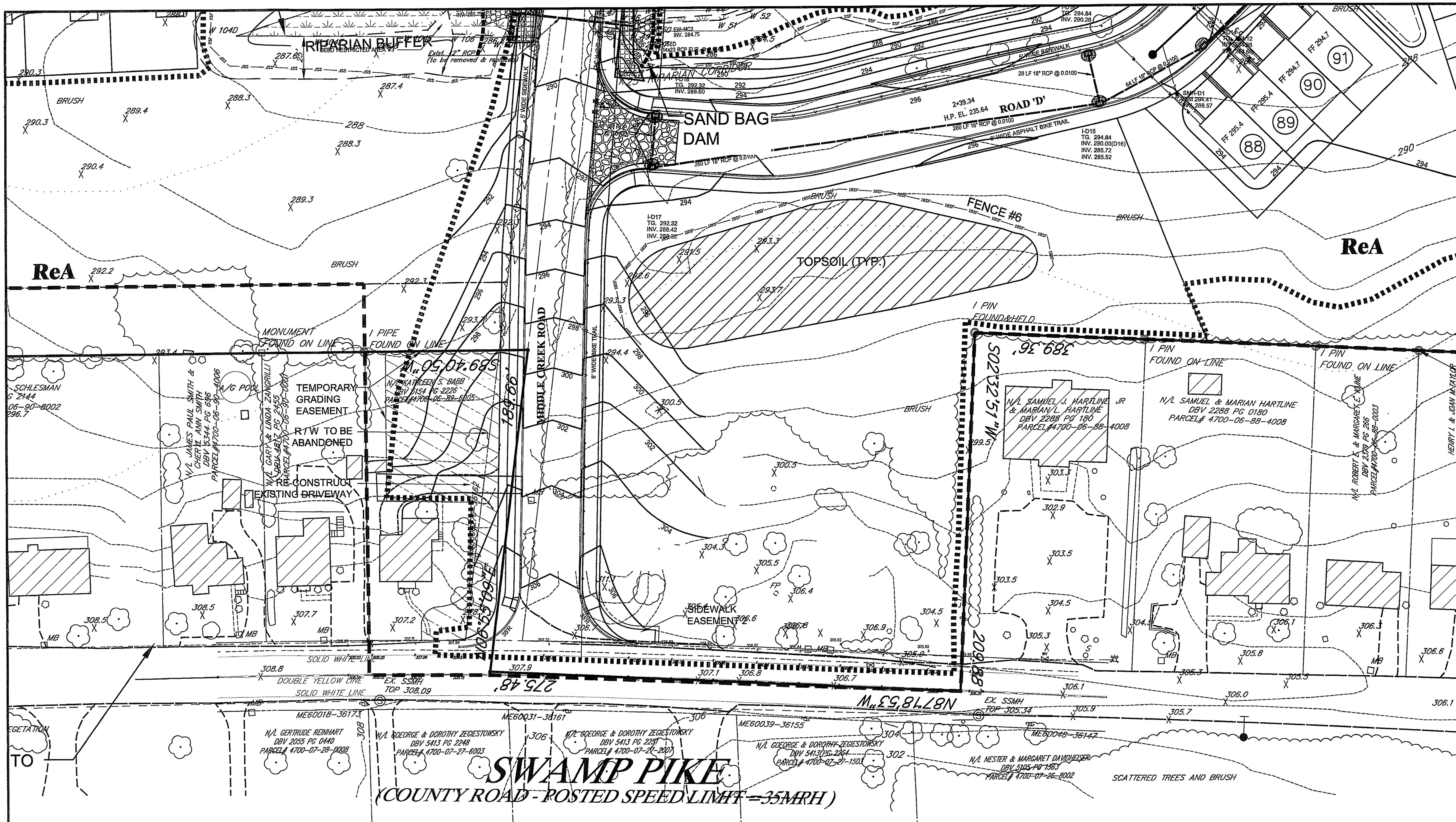

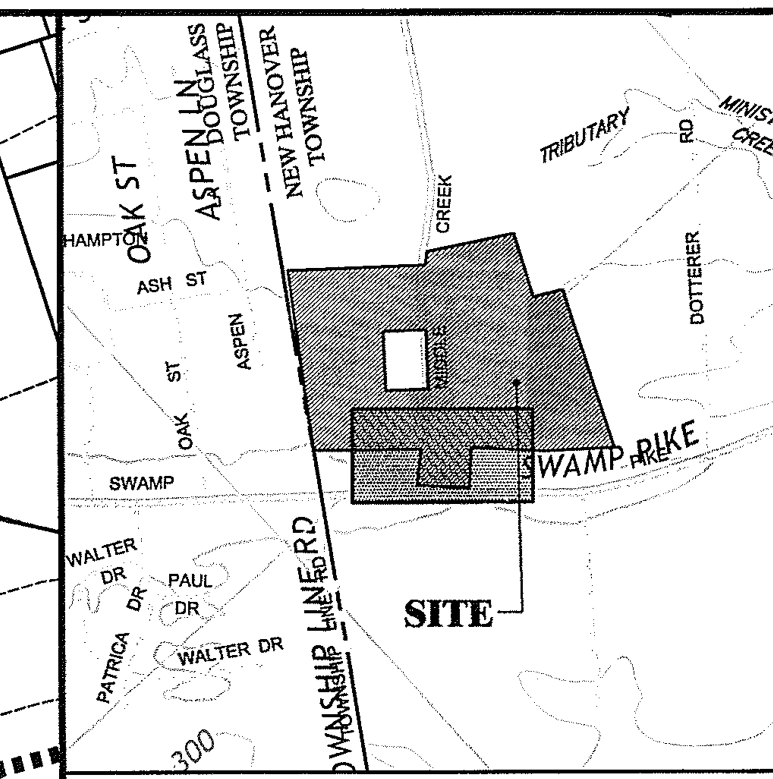

U.S.G.S. QUADRANGLE
LANSDALE
1" = 800'

LEGEND

SYMBOL	DESCRIPTION
	EXISTING WOOD LINE
	EXISTING TREE
	FIRE HYDRANT
W.V.	WATER VALVE
G.V.	GAS VALVE
	ENDWALL
	MANHOLE
	SIGNS
	EXISTING IRON PIN (UNLESS OTHERWISE NOTED)
	EXISTING GRADE
	PROPOSED GRADE
	EXISTING STORM SEWER
	PROPOSED STORM SEWER
	EXISTING SANITARY SEWER
	PROPOSED SANITARY SEWER
	EXISTING SANITARY SEWER LATERAL
	PROPSED SANITARY SEWER LATERAL
	EXISTING WATER LINE
	PROPOSED WATER SERVICE
	PROPOSED WATER SERVICE LATERAL
	EXISTING ELECTRIC LINE
	EXISTING OVERHEAD ELECTRIC LINE
	EXISTING GAS LINE
	EXISTING TELEPHONE LINE
	WETLANDS LINE
	WATERS OF THE U.S. LINE
	SOIL LINE
GeC3	SOIL TYPE
	EROSION CONTROL BLANKET
	CONSTRUCTION ENTRANCE
	TREE PROTECTION
	LIMIT OF DISTURBANCE
18-SF	STANDARD SILT FENCE
30-SF	REINFORCED SILT FENCE
SSF	SUPER SILT FENCE
	LIMIT OF NPDES
	BASIN DRAINAGE AREA
	TOPSOIL STOCK PILE
123.5x x123.5	SPOT ELEVATION
	FILTREXX SOCK FILTER
	INLET PROTECTION
	SAND BAG DAM
	RIP-RAP
	ROCK FILTER
	WETLANDS
	WATERS OF THE U.S.

CALL BEFORE YOU DIG!

PENNSYLVANIA LAW REQUIRES 3 WORKING DAYS NOTICE FOR CONSTRUCTION PHASE AND 10 WORKING DAYS IN DESIGN STAGE - STOP CALL

PA 1 SYSTEM, INC. 1-800-242-1776

POCS SERIAL NUMBER 0145260,0145257

ACT 287, AS AMENDED, TABLE OF CONTACTS

COMPANY NAME

COMCAST COMMUNICATIONS, INC.
190 SHOEMAKER RD.
POTTSTOWN,PA. 19464

COMCAST CABLE
190 SHOEMAKER RD.
POTTSTOWN,PA. 19464

VERIZON PENNSYLVANIA, INC.
900 RACE ST. (6TH FLOOR)
PHILADELPHIA, AP. 19107

METROPOLITAN EDISON COMPANY
2800 POTTSVILLE PIKE
READING,PA. 19612

SUPERIOR WATER COMPANY
1885 SWAMP PIKE SUITE 109
P.O.BOX 525
GILBERTSVILLE,PA. 19525-0525

NEW HANOVER TOWNSHIP AUTHORITY
2943 N. CHARLOTTE ST.
GILBERTSVILLE,PA. 19525

UGI READING
225 MORGANTOWN RD.
READING, PA. 19611

Map Unit Legend (Renniger Tract)

Montgomery County, Pennsylvania (PA091)			
Map Unit Symbol	Map Unit Name	Acres in AOI	Percent of AOI
AbB	Abbottstown silt loam, 3 to 8 percent slopes	1.9	5.6%
BwA	Buckingham silt loam, 0 to 3 percent slopes	0.7	2.1%
CrA	Croton silt loam, 0 to 3 percent slopes	1.2	3.5%
ReA	Readington silt loam, 0 to 3 percent slopes	8.2	24.2%
RhB	Reaville silt loam, 3 to 8 percent slopes	21.8	64.6%
Totals for Area of Interest		33.7	100.0%

PPC PLAN:

1. The site contractor must have a PPC plan available on the site at all times.

Geologic formations or soil conditions 102.8(f)(12)

There are no naturally ocurring geologic formations or soil conditions that may have the potential to cause pollution during Earth Disturbance Activities.

Existing Cover:

Wooded and Meadow.

TABLE E.1 LIMITATIONS OF PENNSYLVANIA SOILS PERTAINING TO EARTHMOVING PROJECTS

SOIL NAME	CUTBANKS CAVE	CORROSIVE TO CONCRETE \ STEEL	DROUGHTY	EASILY ERODIBLE	FLOODING	DEPTH TO SATURATED ZONE/SEASONAL HIGH WATER TABLE	HYDRIC / HYDRIC INCLUSIONS	LOW STRENGTH / LANDSLIDE PRONE	SLOW PERCOLATION	PIPING	POOR SOURCE OF TOPSOIL	FROST ACTION	SHRINK - SWELL	POTENTIAL SINKHOLE	PONDING	WETNESS
Abbottstown	X	C/S		X		X	X	X	X	X	X	X				X
Buckingham	X	C/S		X		X	X	X	X	X	X	X				X
Croton	X	C/S		X		X	X	X	X	X	X	X			X	X
Readington	X	C/S		X		X	X	X	X	X	X	X				X
Reaville	X	C/S	X	X		X	X		X	X	X	X				X

Staging of Earthmoving Activities:

The permittee or co permittee shall contact the department or authorized conservation district at least seven days before construction is to begin to determine if a preconstruction conference is required. The permittee, co permittee, and others undertaking the earth disturbance activity must attend a preconstruction conference when requested by the department or authorized conservation district. The permittee or co-permittee must bring a copy of their NPDES permit, a copy of the stamped plan from the conservation district, and all associated department approvals/permits which must be available at the conference upon request. Also, at least 3 days before starting any earth disturbance activities, all contactors involved in those activities shall notify the Pennsylvania One Call System Incorporated at 1-800-242-1776 for buried utilities locations.

Upon the installation or stabilization of all perimeter sediment control BMPs and at least 3 days prior to proceeding with the bulk earth disturbance activities, the permittee or co-permittee shall provide notification to the department or authorized conservation district.

ALL EARTH DISTURBANCE ACTIVITIES SHALL PROCEED IN ACCORDANCE WITH THE FOLLOWING SEQUENCE. EACH STAGE SHALL BE COMPLETED BEFORE ANY FOLLOWING STAGE IS INITIATED. CLEARING AND GRUBBING SHALL BE LIMITED TO THOSE ARES DESCRIBED IN EACH STAGE.

AREA OF DISTURBANCE – 26.9 Ac.

Sequence of BMP installation and removal 102.4(b)(5)(vii):

1. Field-mark limits of disturbance areas.
2. Install stabilized Rock Construction Entrance as shown on plans.
3. Install all tree protection as shown on plans.
4. Install all Compost Filter Socks and silt fence as shown on plans.
5. Install all sediment basins and traps as shown on the plans.(see sheet 21 of 54 for more information).
6. Clear and Grub.
5. Strip topsoil, stockpile. Immediately install silt fence downslope from stockpile as shown on plans.
6. Rough grade roadways, apply stone base immediately as shown on plans.
7. Install utilities as shown on plans.(see sheet 21 of 54 for more information).
8. Install Storm sewer system, backfill and stabilize immediately after work is completed for the day.
9. Install inlet protection immediately upon placement of proposed inlets as shown on plans.
12. Rough grade lots as shown on plans.
13. Grade drainage swales. Stabilize swales immediately with either sod, or geotextile fabric, as specified on the swale detail, shown on sheet 23 of 54.
14. Construct houses. (see "House Construction Proceedure" on sheet 21 of 54).
15. Final grade lot.
16. Spread the required depth of 6" topsoil on the lot as final grading is achieved. Apply permanent seeding, fertilize and mulch immediately upon final grading.
17. Install wearing course on driveway.
18. Install landscaping.
19. Remove all erosion and sedimentation controls as each tributary area is stabilized. Stabilization is achieved only when 70% uniform ground cover is established. Fertilize, seed and mulch any disturbed areas following the removal process.

"FINAL"

30 0 30 60 90
GRAPHIC SCALE

NO.	DATE	DESCRIPTION	BY
8	1/9/17	REVISED PHASE "D"	JAS
7	11/9/15	REVISED PHASE "B"	JAS
6	8/12/14	REV MIDDLE CREEK ROAD	RMC
5	9/6/13	REV. PER TWP. ENG. COMMENTS	RMC
4	8/23/13	REV. PER TWP. ENG. LETTER DATED 7/31/13	JAS
3	6/24/13	REV. AS PER MCCD LETTER DATED 6/20/13	JAS
2	5/6/13	REV. AS PER NPDES MINOR REVISION	JAS
1	11/30/12	REV. AS PER TWP. ENG. LETTER DATED 6/6/12	JAS

RENNINGER PROPERTY SUBDIVISION

EROSION AND SEDIMENT CONTROL PLAN (5 of 5)

PREPARED FOR
GAMBONE SWAMP PIKE, L.P.
NEW HANOVER TOWNSHIP
MONTGOMERY COUNTY
PENNSYLVANIA

Chambers Associates, Inc.
Consulting Engineers and Surveyors
2962 Skippack Pike P.O. Box 678
Worcester, PA 19490-0678
484-991-8187

SCALE	DATE	JOB	DRAWING NO.
1"=30'	4-27-12	485-084	SHEET 20 of 54
MANAGER: JPH			DRAWN BY: JAS

L:\Projects\485084\19-Submissions\SUBMISSION SET OF PLANS 1-9-17\SHEETS 15-20.dwg, 20, 1/10/2017 12:45:29 PM, RICOH MP C6000 PS

SOILS

The delineated soils were taken from the on-line U.S.D.A. Web Soil Survey for Montgomery County dated Fefruary 12, 2013. The site consists of Abbottstown Silt Loams (AbB), Buckingham Silt Loam (BwA), Croton Silt Loams (CrA), Readington Silt Loam (ReA) and Reaville Silt Loam (RhB). The following descriptions pertain to the individual soil types found on the construction areas of the site:

Soil Legend:
AbB - Abbottstown Silt Loam, 3 to 8 percent slopes
BwA- Buckingham Silt Loam, 0 to 3 percent slopes
CrA - Croton Silt Loam, 0 to 3 percent slopes
ReA - Readington Silt Loam, 0 to 3 percent slopes
RhB - Reaville Silt Loam, 3 to 8 percent slopes

AbB-Abbottstown silt loam, 3 to 8 percent slopes
Map Unit Setting
Landscape: Uplands, valleys
Elevation: 200 to 1,000 feet
Mean annual precipitation: 40 to 48 inches
Mean annual air temperature: 50 to 55 degrees F
Frost-free period: 160 to 200 days
Map Unit Composition
Abbottstown and similar soils: 93 percent
Minor components: 6 percent
Description of Abbottstown
Setting
Landform: Hillslopes
Landform position (two-dimensional): Footslope, toeslope
Landform position (three-dimensional): Base slope, head slope
Down-slope shape: Concave, linear
Across-slope shape: Linear, concave
Parent material: Acid reddish brown residuum weathered from shale and siltstone
Properties and qualities
Slope: 3 to 8 percent
Depth to restrictive feature: 15 to 30 inches to fragipan; 40 to 60 inches to lithic bedrock
Drainage class: Somewhat poorly drained
Capacity of the most limiting layer to transmit water (Ksat): Moderately low to moderately high (0.06 to 0.20 in/hr)
Depth to water table: About 6 to 18 inches
Frequency of flooding: None
Frequency of ponding: None
Available water capacity: Low (about 3.7 inches)
Interpretive groups
Farmland classification: Farmland of statewide importance
Land capability (nonirrigated): 3w
Hydrologic Soil Group: C
Typical profile
0 to 10 inches: Silt loam
10 to 20 inches: Silt loam
20 to 39 inches: Channery loam
39 to 48 inches: Channery silt loam
48 to 49 inches: Bedrock
Minor Components
Croton
Percent of map unit: 6 percent
Landform: Depressions
Landform position (two-dimensional): Toeslope
Landform position (three-dimensional): Base slope
Down-slope shape: Concave, linear
Across-slope shape: Linear, concave

BwA-Buckingham silt loam, 0 to 3 percent slopes
Map Unit Setting
Landscape: Uplands, valleys
Elevation: 150 to 450 feet
Mean annual precipitation: 38 to 48 inches
Mean annual air temperature: 46 to 57 degrees F
Frost-free period: 150 to 200 days

Map Unit Composition
Buckingham and similar soils: 80 percent
Minor components: 7 percent
Description of Buckingham
Setting
Landform: Drainageways
Landform position (two-dimensional): Toeslope
Landform position (three-dimensional): Head slope
Down-slope shape: Linear, concave
Across-slope shape: Concave, linear
Parent material: Fine-loamy colluvium and old alluvium derived from shale and siltstone
Properties and qualities
Slope: 0 to 3 percent
Depth to restrictive feature: 20 to 40 inches to fragipan; 80 to 99 inches to lithic bedrock
Drainage class: Somewhat poorly drained
Capacity of the most limiting layer to transmit water (Ksat): Moderately low to moderately high (0.06 to 0.60 in/hr)
Depth to water table: About 6 to 18 inches
Frequency of flooding: None
Frequency of ponding: None
Available water capacity: Moderate (about 7.4 inches)
Interpretive groups
Farmland classification: Farmland of statewide importance
Land capability (nonirrigated): 3w
Hydrologic Soil Group: C
Typical profile
0 to 16 inches: Silt loam
16 to 40 inches: Silt loam
40 to 48 inches: Silty clay loam
48 to 62 inches: Gravelly silt loam
Minor Components
Croton
Percent of map unit: 5 percent
Landform: Depressions
Landform position (two-dimensional): Toeslope
Landform position (three-dimensional): Base slope
Down-slope shape: Linear, concave
Across-slope shape: Linear, concave
Knauers
Percent of map unit: 2 percent
Landform: Flood plains
Landform position (two-dimensional): Toeslope, footslope
Landform position (three-dimensional): Tread
Down-slope shape: Linear, concave
Across-slope shape: Concave, linear

CrA-Croton silt loam, 0 to 3 percent slopes
Map Unit Setting
Landscape: Uplands
Mean annual precipitation: 40 to 48 inches
Mean annual air temperature: 50 to 55 degrees F
Frost-free period: 160 to 190 days
Map Unit Composition
Croton and similar soils: 82 percent
Description of Croton
Setting
Landform: Depressions
Landform position (two-dimensional): Toeslope
Landform position (three-dimensional): Base slope
Down-slope shape: Concave, linear
Across-slope shape: Linear, concave
Parent material: Residuum weathered from sandstone and shale
Properties and qualities
Slope: 0 to 3 percent
Depth to restrictive feature: 12 to 25 inches to fragipan; 40 to 60 inches to lithic bedrock
Drainage class: Poorly drained
Capacity of the most limiting layer to transmit water (Ksat): very low to moderately high (0.00 to 0.20 in/hr)
Depth to water table: About 0 to 6 inches
Frequency of flooding: None
Frequency of ponding: Occasional
Available water capacity: Low (about 3.4 inches)
Interpretive groups
Farmland classification: Not prime farmland
Land capability (nonirrigated): 4w *Hydrologic Soil Group:* D
Typical profile
0 to 11 inches: Silt loam
11 to 19 inches: Silty clay loam
19 to 30 inches: Channery silty clay loam
30 to 44 inches: Channery silt loam
44 to 64 inches: Bedrock

ReA-Readington silt loam, 0 to 3 percent slopes
Map Unit Setting *Landscape:* Uplands *Elevation:* 200 to 900 feet
Mean annual precipitation: 36 to 50 inches
Mean annual air temperature: 46 to 57 degrees F
Frost-free period: 160 to 200 days
Map Unit Composition
Readington and similar soils: 85 percent
Minor components: 3 percent
Description of Readington
Setting
Landform: Hillslopes
Landform position (two-dimensional): Backslope, footslope
Landform position (three-dimensional): Base slope, head slope, side slope
Down-slope shape: Linear, concave
Across-slope shape: Linear, concave
Parent material: Residuum weathered from shale and siltstone
Properties and qualities
Slope: 0 to 3 percent
Depth to restrictive feature: 20 to 36 inches to fragipan; 40 to 70 inches to lithic bedrock
Drainage class: Moderately well drained
Capacity of the most limiting layer to transmit water (Ksat): Moderately high (0.20 to 0.60 in/hr)
Depth to water table: About 18 to 36 inches
Frequency of flooding: None
Frequency of ponding: None
Available water capacity: Low (about 4.0 inches)
Interpretive groups
Farmland classification: All areas are prime farmland
Land capability (nonirrigated): 2w
Hydrologic Soil Group: C
Typical profile
0 to 8 inches: Silt loam
8 to 29 inches: Silt loam
29 to 58 inches: Channery silt loam
58 to 68 inches: Bedrock
Minor Components
Croton
Percent of map unit: 3 percent
Landform: Depressions
Landform position (two-dimensional): Toeslope
Landform position (three-dimensional): Base slope
Down-slope shape: Linear, concave
Across-slope shape: Concave, linear

RhB-Reaville silt loam, 3 to 8 percent slopes
Map Unit Setting
Landscape: Uplands, valleys
Elevation: 200 to 1,000 feet
Mean annual precipitation: 40 to 55 inches
Mean annual air temperature: 48 to 55 degrees F
Frost-free period: 160 to 200 days
Map Unit Composition
Reaville and similar soils: 85 percent
Minor components: 2 percent
Description of Reaville
Setting
Landform: Hills, hillslopes
Landform position (two-dimensional): Footslope, summit
Landform position (three-dimensional): Base slope, interfluve
Down-slope shape: Linear, concave
Across-slope shape: Linear, concave
Parent material: Red triassic residuum weathered from sandstone and shale
Properties and qualities
Slope: 3 to 8 percent
Depth to restrictive feature: 20 to 40 inches to lithic bedrock
Drainage class: Moderately well drained
Capacity of the most limiting layer to transmit water (Ksat): Moderately low to moderately high (0.06 to 0.20 in/hr)
Depth to water table: About 6 to 36 inches
Frequency of flooding: None
Frequency of ponding: None
Available water capacity: Low (about 3.8 inches)
Interpretive groups
Farmland classification: Farmland of statewide importance
Land capability (nonirrigated): 3w
Hydrologic Soil Group: C
Typical profile
0 to 8 inches: Silt loam
8 to 19 inches: Channery silty clay loam
19 to 32 inches: Very channery silt loam
32 to 42 inches: Bedrock
Minor Components
Croton
Percent of map unit: 2 percent
Landform: Depressions
Landform position (two-dimensional): Toeslope
Landform position (three-dimensional): Base slope
Down-slope shape: Concave, linear
Across-slope shape: Linear, concave

Wetlands

Wetlands and waters of The Commonwealth were delineated by Del Val Soil & Environmental Consultants, Inc. and are depicted on the plans.

FIGURE 3.11
Temporary Cofferdam and Pump Bypass Around In-channel Work Areas

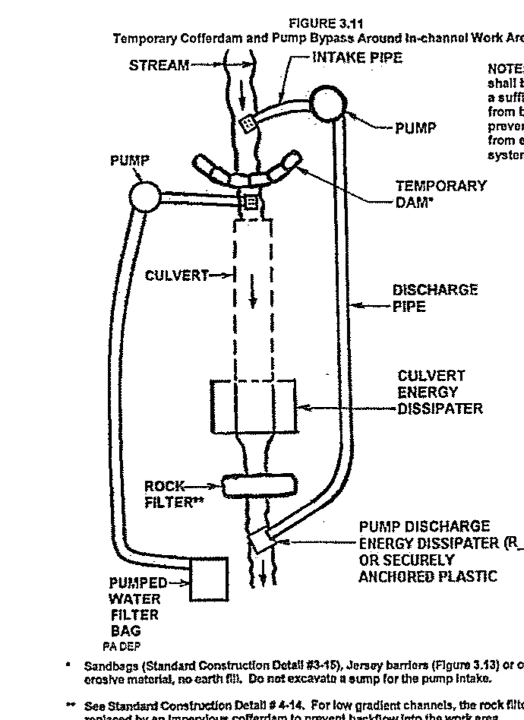

* Sandbags (Standard Construction Detail #3-15), Jersey barriers (Figure 3.13) or other non-erosive material, no earth fill. Do not excavate a sump for the pump intake.

** See Standard Construction Detail # 4-14. For low gradient channels, the rock filter may be replaced by an impervious cofferdam to prevent backflow into the work area.

363-2134-008 / March 31, 2012 / Page 46

SOIL RESOLUTIONS

Low Fertility
Topsoil shall be fertilized prior to seeding.

Acidic Soils
Topsoil shall be tested for pH and limed to obtain a pH of 7.0 to 7.5.

Wet Soils
Trenches shall be pumped to keep them dry. Pumped water shall be filtered through a desilting basin or pumped to a sediment trap or basin. Detention basins, sediment basins and sediment traps constructed in wet soils shall be pumped to a desilting structure until the outlet structure or riser pipe is installed.

Winter Grading
Winter grading shall be done in a careful manner. Extra stabilization methods may be needed to stabilize disturbed earth until the growing season. See general note 13 about winter grading concerns.

Embankments and Diversions
Embankments and diversions shall be constructed of soils that can be compacted and are not highly permeable. Extra non-hydric clay and crushed shale can be added to help with the stability and permeability.

PROPOSED GRADING

The attached Soil Erosion Control Plan indicates the proposed grading for the entire site to be developed.

Storm drainage facilities will primarily control the water by a system of inlets and pipes discharging to stabilized outlets. Riprap outlet aprons shall be provided at the outlets of storm sewer pipes to reduce the velocity of exiting water. All disturbed areas shall be graded at slopes not steeper than 2 foot horizontal to 1 foot vertical. Wet Pond Basins 1A, 1B, 1C and Detention Basin 1D are proposed to reduce post-developed storm flows to pre-developed release rates.

If the site will need to import or export material from the site, the responsibility for performing environmental due diligence and determination of clean fill will rest with the contractor.

Clean Fill is defined as: Uncontaminated, non-water soluble, non-decomposable, inert, solid material. The term includes soil, rock, stone, dredged material, used asphalt, and brick, block or concrete from construction and demolition activities that is separate from other waste and is recognizable as such. The term does not include materials placed in or on the waters of the Commonwealth unless otherwise authorized. (The term "used asphalt" does not include milled asphalt or asphalt that has been processed for re-use).
Clean Fill affected by a spill or release of a regulated substance: Fill materials affected by a spill or release of a regulated substance still qualifies as clean fill provided the testing reveals that the fill material contains concentrations of regulated substances that are below the residential limits in Tables FP-1a and FP-1b found in the Department's policy *"Management of Fill"*.
Any person placing clean fill that has been affected by a spill or release of a regulated substance must use form FP-001 to certify the origin of the fill material and the results of the analytical testing to qualify the material as clean fill. Form FP-001 must be retained by the owner of the property receiving the fill. A copy of Form FP-001 can be found at the end of these instructions.
Environmental due diligence: The applicant must perform environmental due diligence to determine if the fill materials associated with the project qualify as clean fill. Environmental due diligence is defined as: *Investigative techniques, including, but not limited to, visual property inspections, electronic data base searches, review of property ownership, review of property use history, Sanborn maps, environmental questionnaires, transaction screens, analytical testing, environmental assessments or audits*. **Analytical testing is not a required part of due diligence unless visual inspection and/or review of the past land use of the property indicates that the fill may have been subjected to a spill or release of regulated substance.** If the fill may have been affected by a spill or release of a regulated substance, it must be tested to determine if it qualifies as clean fill. Testing should be performed in accordance with Appendix A of the Department's policy *"Management of Fill"*.
Fill material that does not qualify as clean fill is regulated fill. Regulated fill is waste and must be managed in accordance with the Department's municipal or residual waste regulations based on 25 Pa. Code Chapters 287 Residual Waste Management or 271 Municipal Waste Management, whichever is applicable. These regulations are available on-line at www.pacode.com <http://www.pacode.com>.

HYDROLOGIC INFORMATION

The facility designs within this development are consistent with the Township's requirements for storm drainage design.

STABILIZATION

The development will be considered to be permanently stabilized when all permanent control measures/facilities have been completed and are operational, temporary control measures/facilities removed, and uniform erosion resistant perennial vegetation is established to the point where the surface soil is capable of resisting erosion during runoff events. The standard for this vegetative cover will be uniform coverage or density of 70 percent across the disturbed area.

GENERAL EROSION CONTROL NOTES

1. Erosion and sediment control measures must be in compliance with the "Erosion and Sediment Pollution Control Program Manual". The developer or its authorized representative will be responsible for the proper construction, stabilization and maintenance of all erosion and sedimentation controls and related items included within the Erosion and Sedimentation Control Plan. The Contractor is advised to become thoroughly familiar with the provisions of Appendix B-4, Erosion Control Rules and Regulations, Title 24, Part 1, Department of Environmental Resources, Subpart C, Water Resources, Chapter 102, Erosion Control.

2. Notify the Montgomery County Conservation District a minimum of 72 hours prior to the start of construction.

3. A copy of the approved Erosion and Sediment Control Plan must be posted at the construction site in accordance with state law.

4. Before grading or construction begins, the developer or its authorized representative is to construct and complete sediment control measures and devices as shown on the Erosion and Sediment Control Plans.

5. Should additional erosion or sedimentation occur during construction or should questions regarding the maintenance of control practices arise, contact the Montgomery County Conservation District (610) 489-4506 or appropriate agency immediately for technical support.

   Should any measures contained within this plan prove incapable of adequately removing sediment from on-site flows prior to discharge or stabilizing the surfaces involved, additional measures must be immediately implemented by the developer of its authorized representative to eliminate all such problems. The Conservation District must be notified of any additional measures taken to abate the pollution of waters of The Commonwealth not shown on the plans. Stockpiles of wood chips, hay bales, crushed stone and other mulches shall be held in readiness to deal immediately with emergency problems with erosion.

   Site conditions may dictate that during construction additional silt fences, other methods of sediment control, stormwater management or storm drainage measures may be required. The Township may, therefore, direct the installation of additional measures as required.

6. The developer or its authorized representative must develop and have approved by the Bureau of Soil and Water Conservation, a separate Erosion and Sedimentation Control Plan for each soil, borrow or other work area not detailed in the approved plan whether located within or outside of the construction limits.

7. The developer or its authorized representative shall be responsible for supervising debris disposal from other trades during all phases of construction. Debris shall not be disposed of in the woods or detention basin. All concrete wash water shall be disposed of offsite. The operator shall remove from site, recycle, or dispose of all building material and waste in accordance with the Department's solid waste management regulations @ 25PAcode 260.1 et seq., 271.1 et seq, and 287.1 et seq. The contractor shall not illegally bury, dump, or discharge any building material or waste at the site. The developer or its authorized representative shall bear the expense of any clean-up operations initiated by the Engineer or Owner.

8. Roads and driveways are to be stoned immediately after grading is completed and utilities are installed.

9. Locate erosion and sediment control structures in a manner that will cause minimal disturbance to existing vegetation.

10. The developer or its authorized representative is responsible for the continued inspection, maintenance or repair of all erosion and sediment problems that might occur due to the development of this project, until the site is completely stabilized.

11. The developer or its authorized representative shall install silt fence or temporary diversion berms upslope of all watercourses as required preventing sediment from entering the watercourses during construction.

12. Any disturbed area on which activity has ceased must be seeded and mulched immediately. During non-germinating periods, mulch must be applied at the recommended rates.

    Disturbed areas which are not at finished grade and which will be redisturbed within one (1) year may be seeded and mulched with a quick growing temporary seeding mixture and mulched. Disturbed areas, which are either finished grade or will not be redisturbed within one (1) year must be seeded and mulched with a permanent seed mixture and mulched.

    Straw mulch must be applied at rates of at least 3.0 tons per acre.

13. Winter grading shall be handled with special care. Detention basins, sediment basins and traps constructed from soils with poor winter grading characteristics shall not be compacted if frozen or wet (plastic). These soils should be relatively dry to maximize compaction.

    Soils such as Bowmansville have poor stability, but should be used for the core wall. The basin shell can be constructed from Penn, Reaville or other suitable soils.

    Borrow areas used for sediment basins and trap construction shall have silt fence placed below it (prior to grading) and stabilized.

14. Sediment basins and traps shall be constructed as follows:

    A. Clear and grub basin area, strip topsoil, and stockpile the topsoil at one of the designated stockpile locations.

    B. Install silt fence downslope of the topsoil stockpiles and temporarily seed and mulch the stockpiles after stripping operations are completed.

    C. Excavate basins and place compacted embankment fill, and install the basin outlet pipes, anti-seep collars, risers, trash racks, riprap aprons and emergency spillways. If additional soil is needed to construct the control facilities, it may be taken from proposed road excavations above the basins. Generally Bowmansville, Klinesville, and Stony Land, Steep Soils are unsuitable for embankment material.

    D. Install cleanout stakes or baffles and mark the cleanout elevation on the stakes or baffles.

    E. Spread topsoil on the basin berms and permanently seed and mulch the outside slopes, top of berm and inside slopes above the cleanout elevation.

15. House Construction Procedures:

    A. Silt fence shall be placed below the grading operations to filter runoff from each lot.

    B. After roads are paved, each lot shall be provided with a 25' long rock construction entrance at the proposed driveway to keep dirt from being tracked onto the street.

    C. Lots shall be provided with lawn swales along the property lines where indicated on the plans. Swales shall be lined with jute matting or other erosion control matting sufficient to prevent erosion of the topsoil.

    D. Lawn areas shall be seeded or sodded as soon as practical with a permanent perennial grass or wildflower cover. Lawns shall be maintained on a regular basis and repaired, reseeded and mulched until stabilization is achieved.

16. Wetland Mitigation area shall be constructed as follows:

    A. Clear and grub the area, strip topsoil, and stockpile the topsoil at one of the designated stockpile locations.

    B. Install silt fence downslope of the topsoil stockpiles and temporarily seed and mulch the stockpiles after stripping operations are completed.

    C. Excavate the mitigation area as shown on the grading plan.

    D. Spread topsoil on the berms and permanently seed and mulch the outside slopes and inside slopes of the berm.

    E. Refer to the landscape plan for the detailed wetland planting schedule.

17. Until the site is stabilized, all erosion and sedimentation controls must be maintained properly. Maintenance must include inspections of all erosion and sedimentation controls after each storm event and on a weekly basis. All preventative and remedial maintenance work, including clean out, repair, replacement, regrading, reseeding, remulching and renetting must be performed immediately. An extra supply of stone, seed, mulch and silt fence shall be kept on site for emergency purposes.

    Should any measures contained within this plan prove incapable of adequately removing sediment from on-site flows prior to discharge or of stabilizing the surfaces involved, additional measures must be immediately implemented by the developer to eliminate all such problems.

SEQUENCE OF EARTHMOVING

Anticipated Start Date: Spring 2013
Anticipated Completion Date: Fall 2016
Developer and/or Contractor shall notify the Montgomery County Conservation District at least 72 hours prior to the commencement of earthmoving activities, and setup a pre-construction meeting with representatives of, but not limited to, the Conservation District, Municipality, Contractor and Developer.

Montgomery County Conservation District
143 Level road
Collegeville, PA 19426
(610) 489-4506

This project will be developed in one phase.

Prior to any work, the Contractor/Developer shall notify the Montgomery County Conservation District of the date of the pre-construction meeting. All earth disturbance activities shall proceeded in accordance with the following sequence. Each stage shall be completed before any following stage is initiated. Clearing and grubbing shall be limited only to those areas described in each stage.

1. Install stabilized construction entrances at Middle Creek Road as shown on the Erosion & Sediment Control Plan. Construction vehicles shall only use the specified entrance(s) to enter and exit the work areas. If additional entrances are needed that are not specifically identified on the plan, rock construction entrances must be installed at those locations. Install tree protection fence as shown on the plan.

2. Install Super Silt fence around the wetland areas. Install other required silt fence as shown on the plan.

3. Clear the areas designated for Sediment Basins 1A, 1B & 1C, Sediment Trap 1D and for the wetland mitigation area. Construct and stabilize sediment basins and sediment trap. See General Construction Note 14 for the sequence to build these structures. The actual wetland mitigation plantings will be installed after Sediment Basin 1B is converted into a detention basin. Install and stabilize Swale E at the outfall of Basin 1A.

The above erosion and sediment controls must be constructed, stabilized, and functional before general site disturbance within the tributary areas where those controls occur.

4. Clear and grub construction area. Strip and stockpile topsoil in areas indicated on the plan. Maximum height is thirty-five feet (35') and side slopes shall be 2:1 or flatter. Place 18" silt fence below the stockpiles prior to stockpile operations and temporarily seed and mulch the stockpiles after stripping operations are completed.

5. Replace and install the storm pipe under Middle Creek Road. Refer to stream crossing construction sequence.

6. Rough grade proposed roads and the site.

7. Install all utilities. The construction of storm sewers shall progress from downstream to upstream. See Utility Line Trench Excavation. Provide inlet protection to all the inlets on Middle Creek road. Install and stabilize Swales A, B, C, and D once the storm sewers are constructed.

8. Upon the completion of underground utilities, a stone sub-base shall be immediately applied to the roadway. Provide a binder course to the roadway.

9. House construction for lots may begin after the roads are "boxed in". After roads are paved, each lot shall be provided with a 10 foot wide x 25 foot long stoned construction entrance to keep dirt from being tracked onto the street. Silt fence shall be placed below the grading operations to filter runoff from each lot if the adjoining lot is already stabilized. See House Construction Procedures in General Note 15.

10. When the tributary areas to Sediment Basins 1A, 1B, 1C and Sediment Trap 1D are stabilized, and under approval of New Hanover Township and the Montgomery County Conservation District, remove sediment from basins and trap and convert to the permanent detention basin configuration. Grade out sediment basins and stabilize. Remove baffle walls, temporary riser structures and install orifice plates on permanent outlet structures (see detail).

    Install temporary slope pipe from Sediment Basin 1B outlet to divert the runoff around the wetland mitigation area until the wetland mitigation area is stabilized and ready for water to enter it. See General Construction Note 17 for the sequence to build the wetland mitigation area.

11. After the site is stabilized, provide the wearing course to the roadway.

12. Should any measures contained within this plan prove incapable of adequately removing sediment from on-site flows prior to discharge or stabilizing the surfaces involved, additional measures must be immediately implemented by the Developer to eliminate all such problems.

13. Until the site is stabilized, all erosion and sedimentation controls must be maintained properly. Maintenance must include inspections of all erosion and sedimentation controls after each runoff event on a weekly basis. All preventative and remedial maintenance work, including clean out, repair, replacement, regrading, reseeding, remulching, and renetting must be performed immediately. An extra supply of stone, seed, mulch and silt fence shall be kept on-site for emergency purposes. (See the Maintenance Section of this report.)

14. After final site stabilization has been achieved, the temporary erosion and sedimentation controls must be removed. Areas disturbed during the removal of the controls shall be restabilized.

UTILITY LINE TRENCH EXCAVATION
(For Storm Sewers, Sanitary Sewers, Water Lines, etc.)

1. Limit advance clearing and grubbing operations to a distance equal to two (2) times the length of pipe installation that can be completed in one (1) day.
2. Work crews and equipment for trenching, placement of pipe, plug construction and backfilling will be self-contained and separate from clearing and grubbing and site restoration and stabilization operations.
3. Limit daily trench excavation to the length of pipe placement, plug installation and backfilling that can be completed the same day.
4. Trench plugs will be placed in accordance with and constructed of materials shown in the detail.
5. Water which accumulated in the open trench will be completely removed by pumping before pipe placement and/or backfilling begins. Sediment laden water must be filtered through a desilting device before being released (See Detail Sheet).
6. On the day following pipe placement and trench backfilling, the disturbed area will be graded to final contours and appropriate temporary erosion and sediment pollution control measures/facilities will be installed. Seeding and mulching of all disturbed areas will be done at the end of each week.
7. In certain cases, trenches cannot be backfilled until the pipe is hydrostatically tested, or anchors and other permanent features are installed. In these cases, all of the requirements listed under Items 1-6 will remain in effect with the following exceptions.

   (a) Daily backfilling of the trench may be delayed for six (6) days. All pressure testing and the complete backfilling of the open trench must be completed by the seventh working day.

   (b) If daily backfilling is delayed, the disturbed area will be graded to final contours, appropriate temporary erosion and sediment control measures/facilities will be installed, and the areas are seeded and mulched within the next two (2) calendar days.

STREAM CROSSING CONSTRUCTION SEQUENCE

1. Work shall be scheduled by the Contractor to be done when the stream bed is dry or has a low flow.
2. Excavation shall be undertaken from the top of banks whenever possible. No tract equipment should operate in the creek.
3. All excavated channel materials that will be subsequently used as backfill will be placed in a temporary stockpile located at least 100 feet outside of the floodplain. These storage areas must be encircled with a barrier or sediment removal structure to prevent sediment-laden runoff from re-entering the channel. All excavated materials that will not be used on the site must be immediately hauled to a disposal site located at least 100 feet outside of the floodplain.
4. Place sandbag dam across the creek above and below the pipe work. Place a pump in the stream above the sandbag dam and pipe the flow below the second sandbag dam.
5. Place a second pump between sandbag dams and pump sediment laden water to the desilting basin located on the outside of the work area on a stabilized surface.
6. Silt fence or straw bale dikes shall be placed around the disturbed area at the stream as needed to control sediment.
7. Install the storm pipe; backfilling shall be done as soon as possible. Stream banks shall be stabilized immediately with Curlex 1 or equivalent.
8. Extra silt fence, straw bales, stone filter material and mulch shall be stockpiled nearby for use in case of emergencies.
9. Upon completion of construction, all temporary sediment controls shall be removed and disturbed areas shall be stabilized. Silt fence shall be installed along bottom of road embankment as shown on plan.
10. All exposed earth shall be fine graded and hydroseeded immediately with a permanent seed cover.
11. Time to install temporary sandbag dams and pipe is 2 days. Time to remove and restabilize the stream is 2 days.

TEMPORARY CONTROL MEASURES

Temporary control measures which were previously discussed are as follows:

1. Silt fence barriers shall be provided to retard runoff and collect sediment.
2. Temporary seeding of topsoil stockpile area and bare earth shall be provided for areas, which will remain unstabilized.
3. Temporary stone ballast tire cleaners shall be provided at construction entrances.
4. Should work be extended into winter months, and if temporary seeding is not feasible, erosion may be controlled by placing straw mulch over disturbed areas. This mulch will be maintained until weather conditions permit seeding.
5. Sediment basins and traps to settle the sediment out of stormwater runoff.
6. Inlet filters to filter runoff prior to storm flows entering the storm sewer system.

PERMANENT CONTROL MEASURES

Permanent control measures which are designed to control sediment and erosion and runoff from the site are as follows:

1. Paved streets, driveways, inlets and storm sewer pipes.
2. All lawn areas shall be adequately seeded and stabilized to provide permanent control of erosion after completion of construction. Stabilization means 70% of a square foot is covered with grass.
3. Permanent stormwater detention basins shall control the rate of discharge from the site at better than pre-developed conditions.

MAINTENANCE OF EROSION CONTROL FACILITIES

The general contractor, or in the absence of a general contractor, the owner, shall be responsible for implementing and maintaining all Soil Erosion Controls.

The contractor shall, at the end of each week as well as each rainfall, inspect all drainage and erosion control facilities to determine if they still function. Inlet sediment filters shall be cleaned after each rainfall. Silt fence shall be cleared of silt when silt reaches halfway up fence. Sediment basins and traps shall be dredged when silt reaches the clean-out level. Soil level shall be maintained at six inches (6") below curb height on the high sides of the street for unfinished lots. Additional stone ballast shall be placed, if necessary, to control the tracking of mud by construction vehicles onto the adjacent roads.

If additional silt fence, silt traps, sediment basins, or swale diversions are necessary, they shall be provided as directed by the Township Engineer. The Montgomery County Conservation District must review all changes. Sediment deposited behind silt barriers, and the sediment basins shall be removed and incorporated into the final grading operations on the site. It is not to be taken off-site.

When the entire project has become stabilized, any temporary sediment and erosion controls shall be removed and the areas stabilized.

CONSTRUCTION NOTICE

This narrative shall hang on a peg above or along side the drawing/sheet board so that it will be a ready reference to all parcel activity.

PLANS

This report accompanies the Erosion and Sedimentation Control Plan for "Renninger Property" as prepared by Chambers Associates, Inc.,Worcester, Pennsylvania.

REVISIONS

If any changes are to be made to the limits of disturbance or to the Erosion and Sediment Control Plan, the contractor(s) or landowner shall contact the Montgomery County Conservation District at (610) 489-4506 for the adequacy of these changes.

CONDITION	FORMULA AND SPECIES	% BY WEIGHT	MINIMUM % PURITY	MINIMUM % GERMINATION	MAX. % WEED SEED	SEEDING RATE LBS. PER 1000 SY.
LAWN AREAS LESS THEN 3 TO 1	FORMULA B • PERENNIAL RYEGRASS MIXTURE (LOLIUM PERENNE) A COMBINATION OF IMPROVED CERTIFIED VARIETIES WITH NO ONE VARIETY EXCEEDING 50% OF THE TOTAL.	20	98	90	0.15	21.0 TOTAL 4.0
	• CREEPING RED FESCUE OR CHEWINGS FESCUE	30	98	85	0.15	6.0
	• KENTUCKY BLUEGRASS MIXTURE (POA PRATENSIS) A COMBINATION OF IMPROVED CERTIFIED VARIETIES WITH NO ONE VARIETY EXCEEDING 25% OF THE TOTAL.	50	98	80	0.20	11.0 21.0
LAWN AREAS GREATER THEN 3 TO 1	FORMULA C • CROWNVETCH (CORONILLA VARIA)	45	99	70	0.10	9.0 TOTAL 4.0
	• ANNUAL RYEGRASS (LOLIUM MULTIFLORUM)	55	98	90	0.15	5.0 9.0
PERMANENT SWALES	FORMULA D • TALL FESCUE (FESTUCA ARUNDINACEA VAR. KENTUCKY 31)	70	98	85	0.15	21.0 TOTAL 15.0
	• CREEPING RED FESCUE OR CHEWINGS FESCUE	30	98	85	0.15	6.0 21.0
TEMPORARY	FORMULA E • ANNUAL RYEGRASS (LOLIUM MULTIFLORUM)	100	98	90	0.15	10.0 TOTAL 10.0

PERMANENT SEEDING
PREPARATION OF SEEDING. GRADE AS NECESSARY TO BRING THE SUBGRADE TO A TRUE, SMOOTH SLOPE PARALLEL TO AND SIX (6) INCHES BELOW FINISHED GRADE. PLACE TOPSOIL OVER SPECIFIED AREAS TO A DEPTH SUFFICIENTLY GREATER THAN SIX (6) INCHES SO THAT AFTER SETTLEMENT AND LIGHT ROLLING THE COMPLETE WORK WILL CONFORM TO LINES, GRADES AND ELEVATIONS SHOWN.

APPLY 2700 LBS./ACRE AGRICULTURAL GRADE LIMESTONE AND 5-10-5 FERTILIZER AT A RATE OF 240 LBS./ACRE.

FERTILIZER AND AGRICULTURAL LIMESTONE SHALL BE THOROUGHLY INCORPORATED INTO THE SOIL BY ROTATILLING OR OTHER METHOD TO A MINIMUM DEPTH OF FOUR (4) INCHES. THE ENTIRE SURFACE SHALL BE DONE IN TWO (2) SEPARATE OPERATIONS. THE SECOND SEEDING SHALL BE DONE IMMEDIATELY AFTER THE FIRST AND AT RIGHT AT RIGHT ANGLES TO THE FIRST SEEDING AND LIGHTLY RAKED INTO THE SOIL. MULCH SEEDED AREAS IMMEDIATELY AFTER SEEDING.

TEMPORARY SEEDING
SITE PREPARATION: APPLY 2700 LBS./ACRE AGRICULTURAL GRADE LIMESTONE AND 10-10-10 FERTILIZER AT A RATE OF 180 LBS./ACRE AND WORK IN WHERE POSSIBLE. SECURE A SOIL TEST BEFORE MAKING A PERMANENT SEEDING. AFTER SEEDING, MULCH WITH HAY OR STRAW AT A RATE OF 3 TONS PER ACRE.

GENERAL NOTES
1. ANY DISTURBED AREA ON WHICH ACTIVITY HAS CEASED AND WHICH WILL REMAIN EXPOSED MUST BE SEEDED AND MULCHED IMMEDIATELY. DURING NON-GERMINATING PERIODS, MULCH MUST BE APPLIED AT THE RECOMMENDED RATES. DISTURBED AREAS WHICH ARE NOT AT FINISHED GRADE AND WHICH WILL BE REDISTURBED WITHIN 1 YEAR MAY BE SEEDED AND MULCHED WITH A QUICK GROWING TEMPORARY SEEDING MIXTURE AND MULCH. DISTURBED AREAS WHICH ARE EITHER AT FINISHED GRADE OR WILL NOT BE REDISTURBED WITHIN 1 YEAR MUST BE SEEDED AND MULCHED WITH A PERMANENT SEED MIXTURE AND MULCH.
2. DIVERSIONS, CHANNELS, SEDIMENTATION BASINS SEDIMENT TRAPS AND STOCKPILES MUST BE SEEDED AND MULCHED IMMEDIATELY.
3. HAY OR STRAW MULCH MUST BE APPLIED AT RATES OF AT LEAST 3.0 TONS PER ACRES.

SEEDING SPECIFICATION

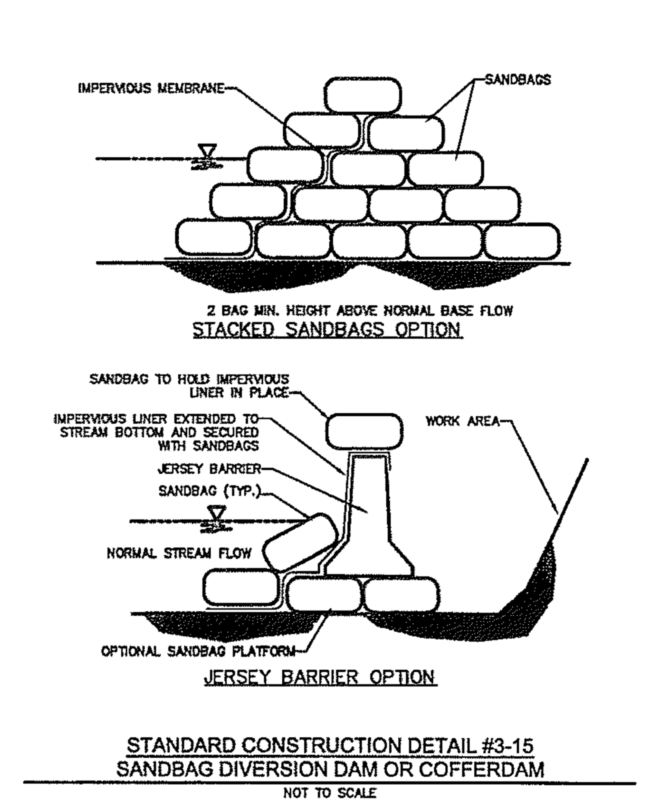

STANDARD CONSTRUCTION DETAIL #3-15
SANDBAG DIVERSION DAM OR COFFERDAM
NOT TO SCALE

"FINAL"

NO.	DATE	DESCRIPTION	BY
8	1/9/17	REVISED PHASE "D"	JAS
7	11/9/15	REVISED PHASE "B"	JAS
6	8/12/14	REV MIDDLE CREEK ROAD	RMC
5	9/6/13	REV. PER. TWP. ENG. COMMENTS	RMC
4	8/23/13	REV. PER. TWP. ENG. LETTER DATED 7/31/13	JAS
3	6/24/13	REV. AS PER MCCD LETTER DATED 6/20/13	JAS
2	5/6/13	REV. AS PER NPDES MINOR REVISION	JAS
1	11/30/12	REV. AS PER TWP. ENG. LETTER DATED 6/6/12	JAS

RENNINGER PROPERTY SUBDIVISION
EROSION CONTROL NOTES

PREPARED FOR
GAMBONE SWAMP PIKE, L.P.
NEW HANOVER TOWNSHIP
MONTGOMERY COUNTY
PENNSYLVANIA

Chambers Associates, Inc.
Consulting Engineers and Surveyors
2962 Skippack Pike P.O. Box 678
Worcester, PA 19490-0678
484-991-8187

SCALE	DATE	JOB	DRAWING NO.
N.T.S.	4/27/12	485-084	SHEET 21 of 54
MANAGER: JPH		DRAWN BY: JAS	

L:\Projects\485084\19-Submissions\SUBMISSION SET OF PLANS 1-9-17\DETAILS-updated-rodes-details.dwg, 21, 1/26/2017 11:34:35 AM, RICOH MP C6200 PS

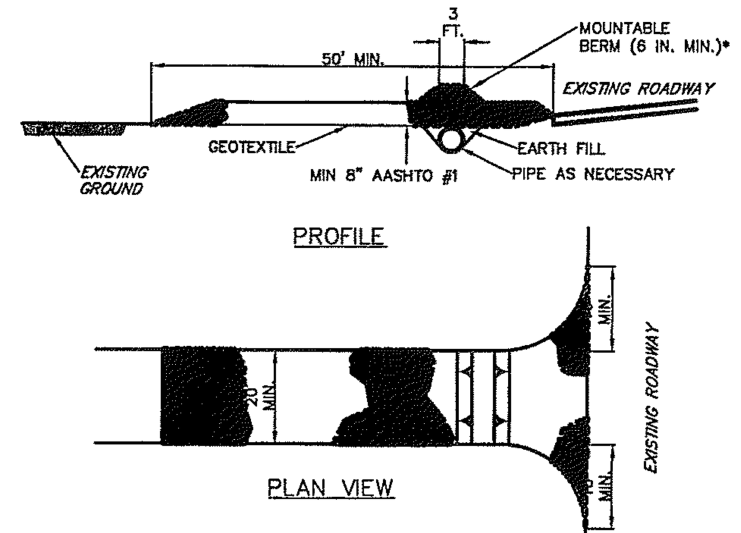

* MOUNTABLE BERM USED TO PROVIDE PROPER COVER FOR PIPE

NOTES:

REMOVE TOPSOIL PRIOR TO INSTALLATION OF ROCK CONSTRUCTION ENTRANCE. EXTEND ROCK OVER FULL WIDTH OF ENTRANCE.

RUNOFF SHALL BE DIVERTED FROM ROADWAY TO A SUITABLE SEDIMENT REMOVAL BMP PRIOR TO ENTERING ROCK CONSTRUCTION ENTRANCE.

MOUNTABLE BERM SHALL BE INSTALLED WHEREVER OPTIONAL CULVERT PIPE IS USED AND PROPER PIPE COVER AS SPECIFIED BY MANUFACTURER IS NOT OTHERWISE PROVIDED. PIPE SHALL BE SIZED APPROPRIATELY FOR SIZE OF DITCH BEING CROSSED.

MAINTENANCE: ROCK CONSTRUCTION ENTRANCE THICKNESS SHALL BE CONSTANTLY MAINTAINED TO THE SPECIFIED DIMENSIONS BY ADDING ROCK. A STOCKPILE SHALL BE MAINTAINED ON SITE FOR THIS PURPOSE. ALL SEDIMENT DEPOSITED ON PAVED ROADWAYS SHALL BE REMOVED AND RETURNED TO THE CONSTRUCTION SITE IMMEDIATELY. IF EXCESSIVE AMOUNTS OF SEDIMENT ARE BEING DEPOSITED ON ROADWAY, EXTEND LENGTH OF ROCK CONSTRUCTION ENTRANCE BY 50 FOOT INCREMENTS UNTIL CONDITION IS ALLEVIATED OR INSTALL WASH RACK. WASHING THE ROADWAY OR SWEEPING THE DEPOSITS INTO ROADWAY DITCHES, SEWERS, CULVERTS, OR OTHER DRAINAGE COURSES IS NOT ACCEPTABLE.

STANDARD CONSTRUCTION DETAIL #3-1
ROCK CONSTRUCTION ENTRANCE
NOT TO SCALE

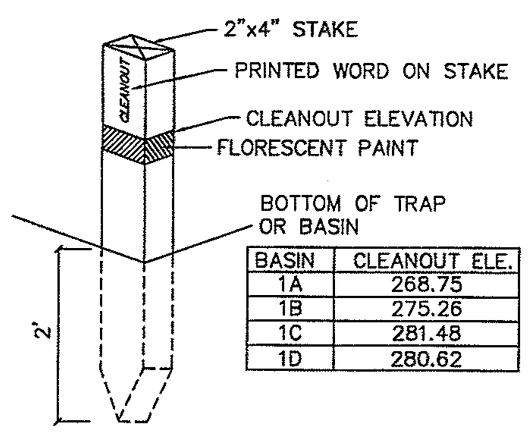

BASIN	CLEANOUT ELE.
1A	268.75
1B	275.26
1C	281.48
1D	280.62

1. CLEANOUT STAKES MUST BE PLACED AT A HALF DISTANCE FROM CONCENTRATED INFLOWS TO TEMPORARY RISERS. WHEN SEDIMENT HAS ACCUMULATED TO CLEANOUT ELEVATION ON ANY STAKE, IT MUST BE REMOVED TO RESTORE BASIN CAPACITY.
2. CLEANOUT STAKES ARE NOT REQUIRED IF THE CLEANOUT ELEVATION IS PAINTED ON THE SEDIMENT BAFFEL.

CLEANOUT STAKE

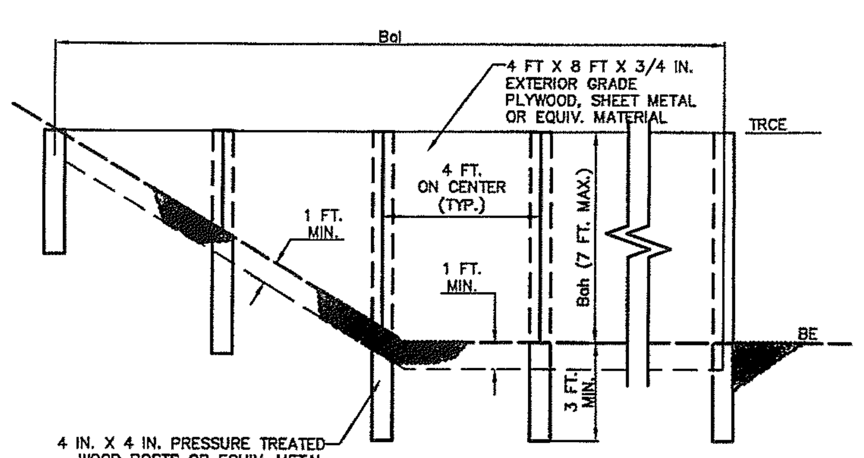

BASIN OR TRAP NO.	BAFFLE LENGTH Bol (FT)	BAFFLE HEIGHT Bah (FT)	TEMPORARY RISER CREST ELEV. TRCE (FT)	BOTTOM ELEV BE (FT)
1A	90	4.5	270.50	266.00

NOTES:

SEE APPROPRIATE BASIN DETAIL FOR PROPER LOCATION AND ORIENTATION.

AN ACCEPTABLE ALTERNATIVE IS TO INSTALL A SUPER SILT FENCE AT THE BAFFLE LOCATION

IN POOLS WITH DEPTHS EXCEEDING 7', THE TOP OF THE PLYWOOD BAFFLE DOES NOT NEED TO EXTEND TO THE TEMPORARY RISER CREST. SUPER SILT FENCE BAFFLES NEED NOT EXTEND TO TRCE ELEVATION.

BAFFLES SHALL BE TIED INTO ONE SIDE OF THE BASIN UNLESS OTHERWISE SHOWN ON THE PLAN DRAWINGS.

SUBSTITUTION OF MATERIALS NOT SPECIFIED IN THIS DETAIL SHALL BE APPROVED BY THE DEPARTMENT OR THE LOCAL CONSERVATION DISTRICT BEFORE INSTALLATION.

DAMAGED OR WARPED BAFFLES SHALL BE REPLACED WITHIN 7 DAYS OF INSPECTION.

BAFFLES REQUIRING SUPPORT POSTS SHALL NOT BE INSTALLED IN BASINS REQUIRING IMPERVIOUS LINERS.

STANDARD CONSTRUCTION DETAIL #7-14
BAFFLE
NOT TO SCALE

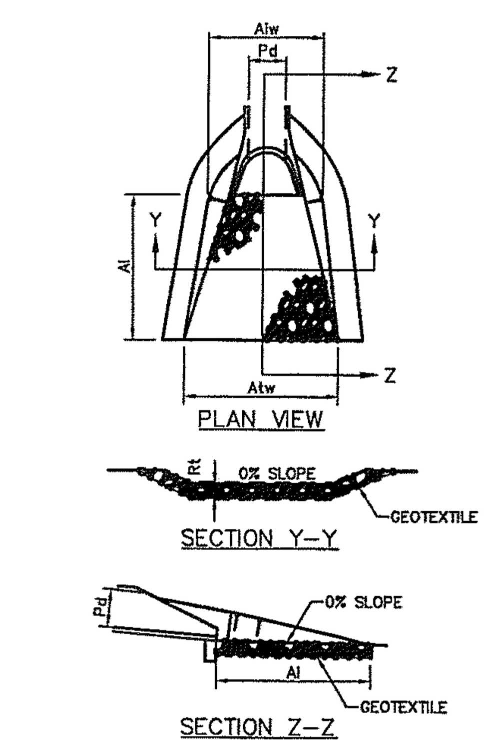

OUTLET NO.	PIPE DIA Pd (IN)	RIPRAP SIZE R--	RIPRAP THICK. Rt (IN)	APRON LENGTH Al (FT)	APRON INITIAL WIDTH Alw (FT)	APRON TERMINAL WIDTH Atw (FT)
EW-A11	18	4	18	8	4.5	12.5
EW-A15	18	4	18	8	4.5	12.5
EW-C15	36	5	27	20	9	29
EW-C16	15	4	18	8	3.75	11.75
EW-MC10	24	4	18	14	6	20
EW-C20	18	4	18	8	4.5	12.5
EW-D1	42	5	27	22	10.5	32.5
EW-D20	24	4	18	14	6	20
EW-E18	15	4	18	8	3.75	11.75
EW-B9	18	4	18	8	4.5	12.5
EW-MC1	14x23	4	18	12	6	18
EW-MC2	14x23	4	18	12	6	18

NOTES:

ALL APRONS SHALL BE CONSTRUCTED TO THE DIMENSIONS SHOWN. TERMINAL WIDTHS SHALL BE ADJUSTED AS NECESSARY TO MATCH RECEIVING CHANNELS.

ALL APRONS SHALL BE INSPECTED AT LEAST WEEKLY AND AFTER EACH RUNOFF EVENT. DISPLACED RIPRAP WITHIN THE APRON SHALL BE REPLACED IMMEDIATELY.

STANDARD CONSTRUCTION DETAIL #9-1
RIPRAP APRON AT PIPE OUTLET WITH FLARED END SECTION OR ENDWALL
NOT TO SCALE

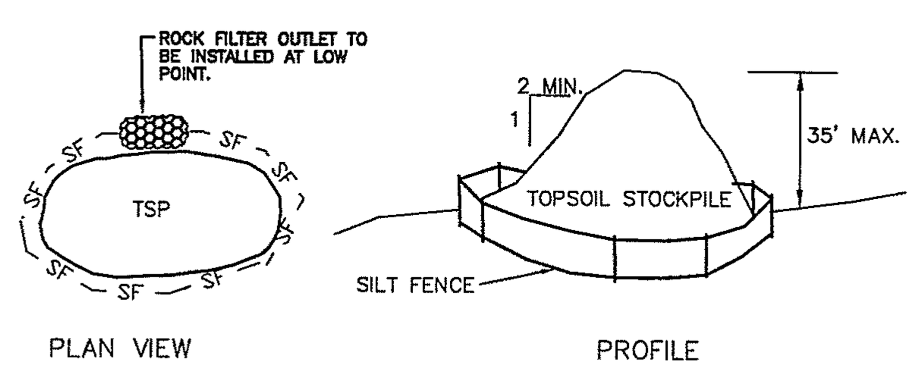

TOPSOIL STOCKPILE DETAIL

NOTES:

1. SILT FENCE MUST BE PLACED AROUND THE PERIMETER OF ALL STOCKPILES.
2. IMMEDIATELY STABILIZE STOCKPILES

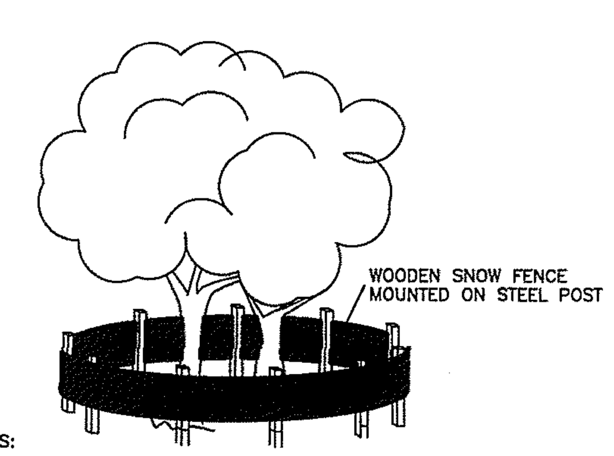

NOTES:

1. BOX TREES WITHIN 25 FEET OF BUILDING AREA TO PREVENT MECHANICAL INJURY TO TREE. FENCING OF OTHER BARRIERS SHALL BE INSTALLED AT THE DRIP LINE OF THE TREE BRANCHES.
2. BOARDS SHALL NOT BE NAILED TO TREES DURING BUILDING OPERATIONS.
3. TREE PROTECTION FENCE SHALL BE LOCATED A MINIMUM OF 15' FROM THE TRUNK OF A TREE, OR AT THE DRIP LINE OF THE CANOPY, WHICHEVER IS GREATER.
4. TREE PROTECTION STANDARDS DESCRIBED IN SECTION 22-825.J OF THE NEW HANOVER TOWNSHIP SUBDIVISION AND LAND DEVELOPMENT ORDINANCE SHALL BE FOLLOWED DURING CONSTRUCTION.

TREE PROTECTION DURING CONSTRUCTION
N.T.S.

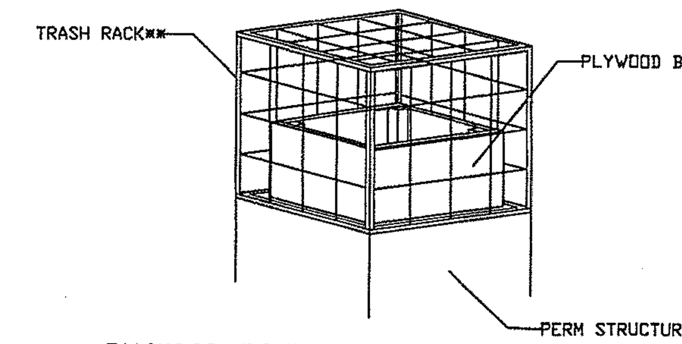

PLYWOOD BOXES AND TRASH RACKS FOR PERMANENT STRUCTURES
NO SCALE

* ¾" MARINE GRADE PLYWOOD BOX WITH 2" X 2" PRESSURE TREATED CORNER SUPPORTS, SET INTO 1 ½" GRATE OFFSETS, CAULK ALL SEAMS TO FORM WATERTIGHT SEALS.

** TRASH RACK COMPOSED OF 1" X 1" X ⅛" L (TYP.) AND #4 BARS (TYP.) WELDED TO THE ANGLES AND AT EACH INTERSECTION OF THE BARS; #4 BARS SPACED @ ½ THE DIAMETER OF THE BARREL MAX.

PLYWOOD BOX MUST BE BOLTED OR STRAPPED TO THE PERMANENT RISER.

TOP OF PLYWOOD BOX MUST BE AT LEAST AS HIGH AS TEMPORARY RISER.

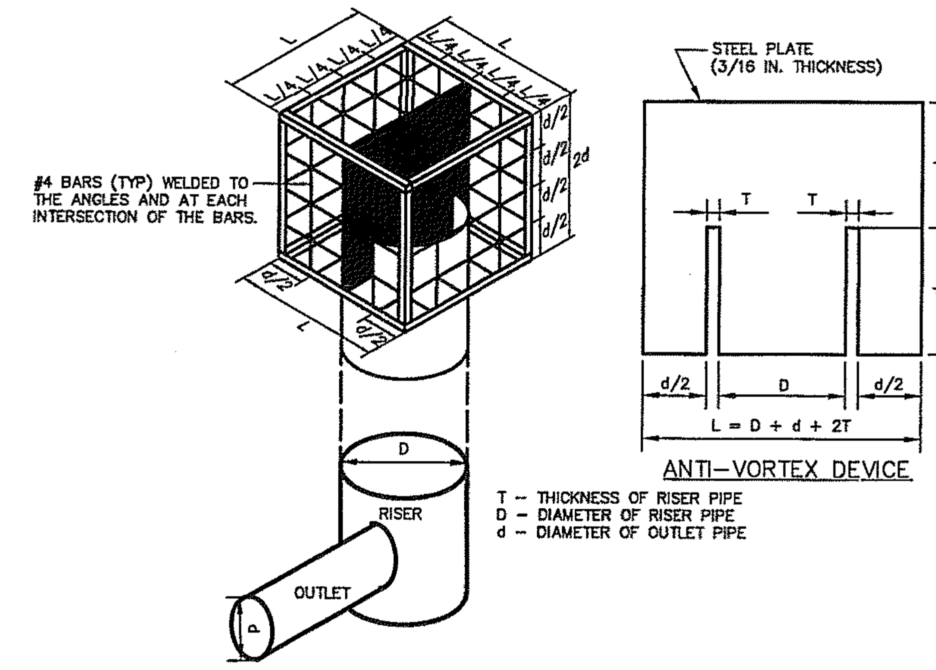

STANDARD CONSTRUCTION DETAIL #7-5
TRASH RACK AND ANTI-VORTEX DEVICE
NOT TO SCALE

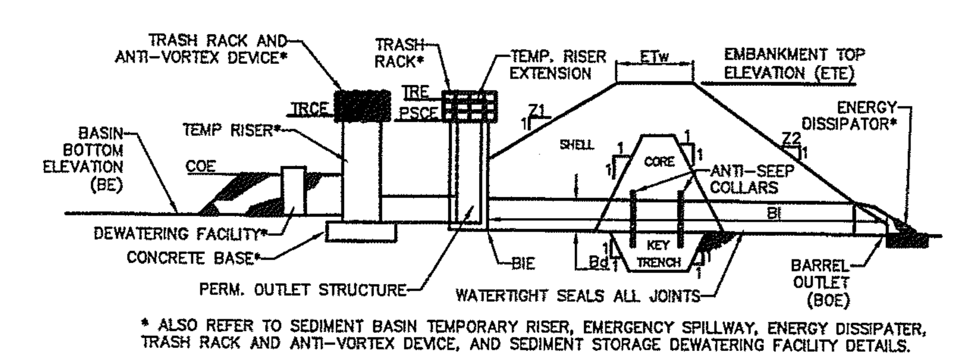

* ALSO REFER TO SEDIMENT BASIN TEMPORARY RISER, EMERGENCY SPILLWAY, ENERGY DISSIPATER, TRASH RACK AND ANTI-VORTEX DEVICE, AND SEDIMENT STORAGE DEWATERING FACILITY DETAILS.

EMBANKMENT SECTION ALONG PRINCIPAL SPILLWAY

BASIN NO.	Z1 (FT)	Z2 (FT)	TEMPORARY RISER DIA TRd (IN)	CREST ELEV TRCE (FT)	MAT'L	TEMP RISER EXT. ELEV TRE (FT)	BARREL DIA Bd (IN)	INLEY ELEV BIE (FT)	MAT'L	LENGTH Bl (FT)	OUTLET ELEV BOE (FT)
1A	2	4	30	270.43	CMP	270.43	18	N/A	RCP	18	268.70
1B	4	4	30	279.42	CMP	279.42	24	N/A	CMP	100	273.80
1C	4	4	30	283.83	CMP	283.83	18	281.50	RCP	50	280.75
1D	4	4	30	282.25	CMP	282.25	18	280.25	RCP	35	280.00

EMBANKMENT TOP ELEV ETE (FT)	TOP WIDTH ETw (FT)	KEY TRENCH DEPTH (FT)	KEY TRENCH WIDTH (FT)	CLEANOUT ELEV COE (FT)	BOTTOM ELEV BE (FT)
273.35	10	2	8	268.75	266.00
282.15	10	2	8	275.26	273.50
286.50	10	2	8	281.48	280.00
286.00	10	2	8	280.62	279.62

NOTES:

SEDIMENT BASINS, INCLUDING ALL APPURTENANT WORKS, SHALL BE CONSTRUCTED TO THE DETAIL AND DIMENSIONS SHOWN ON THE E&S PLAN DRAWINGS.

AREA UNDER EMBANKMENT SHALL BE CLEARED, GRUBBED, AND STRIPPED OF TOPSOIL TO A DEPTH OF TWO FEET PRIOR TO ANY PLACEMENT AND COMPACTION OF EARTHEN FILL. FILL MATERIAL FOR THE EMBANKMENTS SHALL BE FREE OF ROOTS, OR OTHER WOODY VEGETATION, ORGANIC MATERIAL, LARGE STONES, AND OTHER OBJECTIONABLE MATERIALS. THE EMBANKMENT SHALL BE COMPACTED IN LAYERED LIFTS OF NOT MORE THAN 6 TO 9 IN. THE MAXIMUM ROCK SIZE SHALL BE NO GREATER THAN 2/3 THE LIFT THICKNESS. UPON COMPLETION, THE EMBANKMENT SHALL BE SEEDED AND MULCHED OR OTHERWISE STABILIZED ACCORDING TO THE SPECIFICATIONS OF THE E&S PLAN DRAWINGS. TREES SHALL NOT BE PLANTED ON THE EMBANKMENT.

ALL SEDIMENT BASINS SHALL BE INSPECTED ON AT LEAST A WEEKLY BASIS AND AFTER EACH RUNOFF EVENT.

ACCESS FOR SEDIMENT REMOVAL AND OTHER REQUIRED MAINTENANCE ACTIVITIES SHALL BE PROVIDED.

A CLEAN OUT STAKE SHALL BE PLACED NEAR THE CENTER OF EACH BASIN. ACCUMULATED SEDIMENT SHALL BE REMOVED WHEN IT HAS REACHED THE CLEAN OUT ELEVATION ON THE STAKE AND THE BASIN RESTORED TO ITS ORIGINAL DIMENSIONS. DISPOSE OF MATERIALS REMOVED FROM THE BASIN IN THE MANNER DESCRIBED IN THE E&S PLAN.

BASIN EMBANKMENTS, SPILLWAYS, AND OUTLETS SHALL BE CHECKED FOR EROSION, PIPING AND SETTLEMENT. NECESSARY REPAIRS SHALL BE MADE IMMEDIATELY. DISPLACED RIPRAP WITHIN THE OUTLET ENERGY DISSIPATER SHALL BE REPLACED IMMEDIATELY. ACCUMULATED SEDIMENT SHALL BE REMOVED AND DISTURBED AREAS INSIDE THE BASIN STABILIZED BEFORE CONVERSION TO A STORMWATER MANAGEMENT FACILITY. THE DEVICE SHOWN IN STANDARD CONSTRUCTION DETAIL #7-16 MAY BE USED TO DEWATER SATURATED SEDIMENT PRIOR TO ITS REMOVAL. ROCK FILTERS SHALL BE ADDED AS NECESSARY.

STANDARD CONSTRUCTION DETAIL #7-8
SEDIMENT BASIN DETENTION POND EMBANKMENT AND SPILLWAY DETAILS
NOT TO SCALE

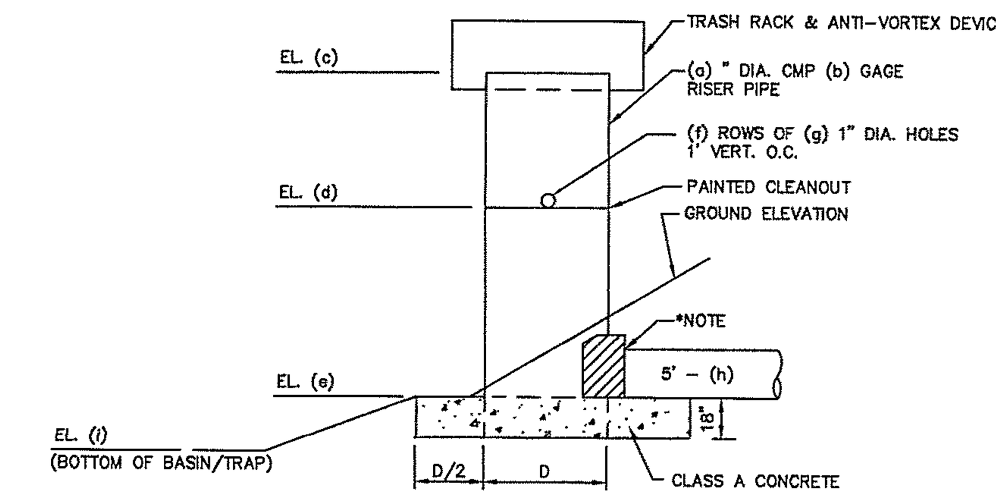

RISER	(a) DIAMETER	(b) GAGE	(c) TOP OF RISER	(d) CLEAN OUT ELEV.	(e) INV. OUTLET PIPE	(f) NO. OF ROWS	(g) HOLES/ROW	HOLE ELEVATIONS	(h) BARREL	(i) BOTTOM OF BASIN/TRAP
BASIN #1A	30" CMP	16	270.43	268.75	268.80	1	3	268.80	18" CMP	266.00
BASIN #1B	36" CMP	16	279.42	275.26	275.26	4	2	275.26, 276.26, 277.26, 278.26	24" CMP	273.50
BASIN #1C	30" CMP	16	283.83	281.48	281.50	2	2	281.50, 282.50	18" CMP	280.00
TRAP #1D	30" CMP	16	282.25	280.62	280.25	1	1	280.62	18" CMP	279.62

*NOTE: WHEN CMP RISERS ARE JOINED TO RCP PIPE BARRELS, THEY SHALL BE SEALED WITH NON-SHRINK GROUT, AND SHALL BE A WATERTIGHT CONNECTION.

SEDIMENT BASIN/TRAP RISER DETAIL
SEE DRAWING NO. CD103608 FOR BASIN "B" EMBANKMENT SECTION DETAIL.

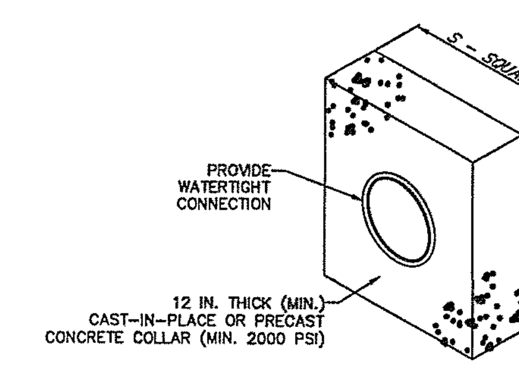

BASIN OR TRAP NO.	PIPE SIZE (IN)	S (IN)	NO. OF COLLARS	RISER TO FIRST COLLAR (FT)	COLLAR SPACING (FT)
1A	18	72	1	7	7
1B	18	72	2	10.5	10.5
1C	18	72	2	10	10
1D	18	72	2	10	10

NOTES:

ALL COLLARS SHALL BE INSTALLED SO AS TO BE WATERTIGHT.

COLLAR SIZE AND SPACING SHALL BE AS INDICATED WITHIN TABLE.

STANDARD CONSTRUCTION DETAIL #7-16
CONCRETE ANTI-SEEP COLLAR FOR PERMANENT BASINS OR TRAPS
NOT TO SCALE

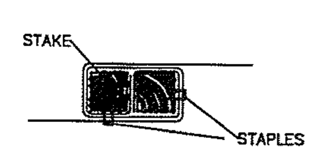

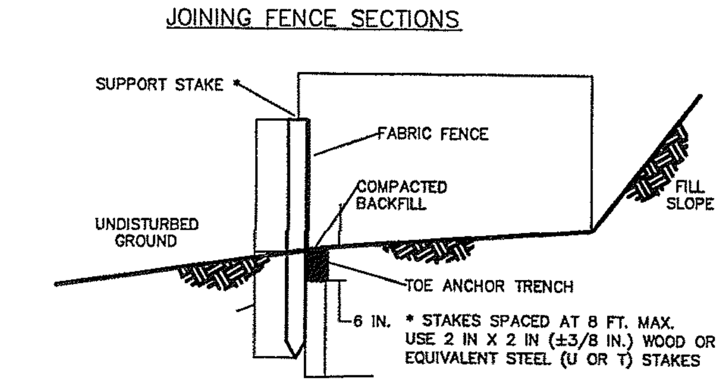

* STAKES SPACED AT 8 FT. MAX. USE 2 IN X 2 IN (±3/8 IN.) WOOD OR EQUIVALENT STEEL (U OR T) STAKES

SECTION VIEW

NOTES:

FABRIC SHALL HAVE THE MINIMUM PROPERTIES AS SHOWN IN TABLE 4.3 OF THE PA DEP EROSION CONTROL MANUAL.

FABRIC WIDTH SHALL BE 30 IN. MINIMUM. STAKES SHALL BE HARDWOOD OR EQUIVALENT STEEL (U OR T) STAKES.

SILT FENCE SHALL BE PLACED AT LEVEL EXISTING GRADE. BOTH ENDS OF THE FENCE SHALL BE EXTENDED AT LEAST 8 FEET UP SLOPE AT 45 DEGREES TO THE MAIN FENCE ALIGNMENT.

SEDIMENT SHALL BE REMOVED WHEN ACCUMULATIONS REACH HALF THE ABOVE GROUND HEIGHT OF THE FENCE.

ANY SECTION OF SILT FENCE WHICH HAS BEEN UNDERMINED OR TOPPED SHALL BE IMMEDIATELY REPLACED WITH A ROCK FILTER OUTLET (STANDARD CONSTRUCTION DETAIL # 4-6).

FENCE SHALL BE REMOVED AND PROPERLY DISPOSED OF WHEN TRIBUTARY AREA IS PERMANENTLY STABILIZED.

STANDARD CONSTRUCTION DETAIL #4-7
STANDARD SILT FENCE (18" HIGH)
NOT TO SCALE

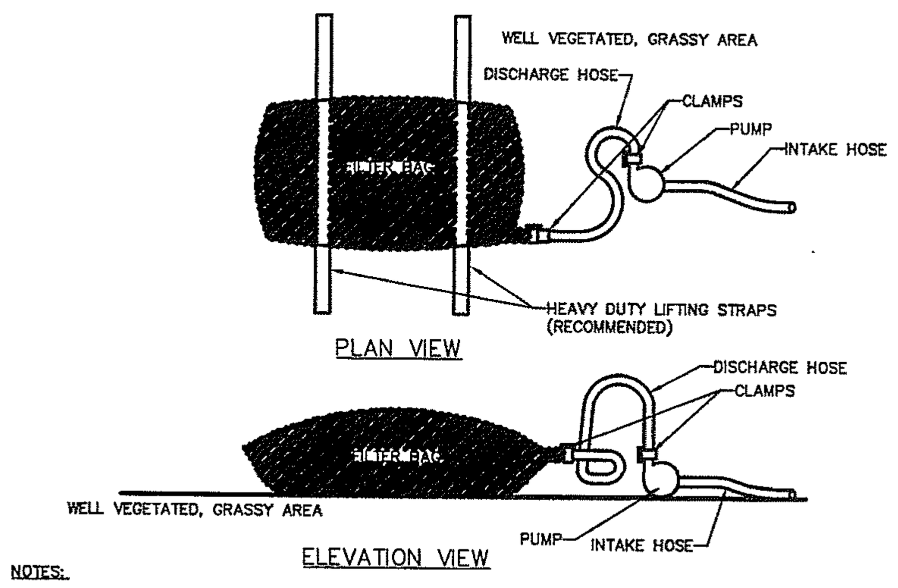

NOTES:

LOW VOLUME FILTER BAGS SHALL BE MADE FROM NON-WOVEN GEOTEXTILE MATERIAL SEWN WITH HIGH STRENGTH, DOUBLE STITCHED "J" TYPE SEAMS. THEY SHALL BE CAPABLE OF TRAPPING PARTICLES LARGER THAN 150 MICRONS. HIGH VOLUME FILTER BAGS SHALL BE MADE FROM WOVEN GEOTEXTILES THAT MEET THE FOLLOWING STANDARDS:

PROPERTY	TEST METHOD	MINIMUM STANDARD
AVG. WIDE WIDTH STRENGTH	ASTM D-4884	60 LB/IN
GRAB TENSILE	ASTM D-4632	205 LB
PUNCTURE	ASTM D-4833	110 LB
MULLEN BURST	ASTM D-3786	350 PSI
UV RESISTANCE	ASTM D-4355	70%
AOS % RETAINED	ASTM D-4751	80 SIEVE

A SUITABLE MEANS OF ACCESSING THE BAG WITH MACHINERY REQUIRED FOR DISPOSAL PURPOSES SHALL BE PROVIDED. FILTER BAGS SHALL BE REPLACED WHEN THEY BECOME 1/2 FULL OF SEDIMENT. SPARE BAGS SHALL BE KEPT AVAILABLE FOR REPLACEMENT OF THOSE THAT HAVE FAILED OR ARE FILLED. BAGS SHALL BE PLACED ON STRAPS TO FACILITATE REMOVAL UNLESS BAGS COME WITH LIFTING STRAPS ALREADY ATTACHED.

BAGS SHALL BE LOCATED IN WELL-VEGETATED (GRASSY) AREA, AND DISCHARGE ONTO STABLE, EROSION RESISTANT AREAS. WHERE THIS IS NOT POSSIBLE, A GEOTEXTILE UNDERLAYMENT AND FLOW PATH SHALL BE PROVIDED. BAGS MAY BE PLACED ON FILTER STONE TO INCREASE DISCHARGE CAPACITY. BAGS SHALL NOT BE PLACED ON SLOPES GREATER THAN 5%. FOR SLOPES EXCEEDING 5%, CLEAN ROCK OR OTHER NON-ERODIBLE AND NON-POLLUTING MATERIAL MAY BE PLACED UNDER THE BAG TO REDUCE SLOPE STEEPNESS.

NO DOWNSLOPE SEDIMENT BARRIER IS REQUIRED FOR MOST INSTALLATIONS. COMPOST BERM OR COMPOST FILTER SOCK SHALL BE INSTALLED BELOW BAGS LOCATED IN HQ OR EV WATERSHEDS, WITHIN 50 FEET OF ANY RECEIVING SURFACE WATER OR WHERE GRASSY AREA IS NOT AVAILABLE.

THE PUMP DISCHARGE HOSE SHALL BE INSERTED INTO THE BAGS IN THE MANNER SPECIFIED BY THE MANUFACTURER AND SECURELY CLAMPED. A PIECE OF PVC PIPE IS RECOMMENDED FOR THIS PURPOSE.

THE PUMPING RATE SHALL BE NO GREATER THAN 750 GPM OR 1/2 THE MAXIMUM SPECIFIED BY THE MANUFACTURER, WHICHEVER IS LESS. PUMP INTAKES SHALL BE FLOATING AND SCREENED.

FILTER BAGS SHALL BE INSPECTED DAILY. IF ANY PROBLEM IS DETECTED, PUMPING SHALL CEASE IMMEDIATELY AND NOT RESUME UNTIL THE PROBLEM IS CORRECTED.

STANDARD CONSTRUCTION DETAIL #3-16
PUMPED WATER FILTER BAG
NOT TO SCALE

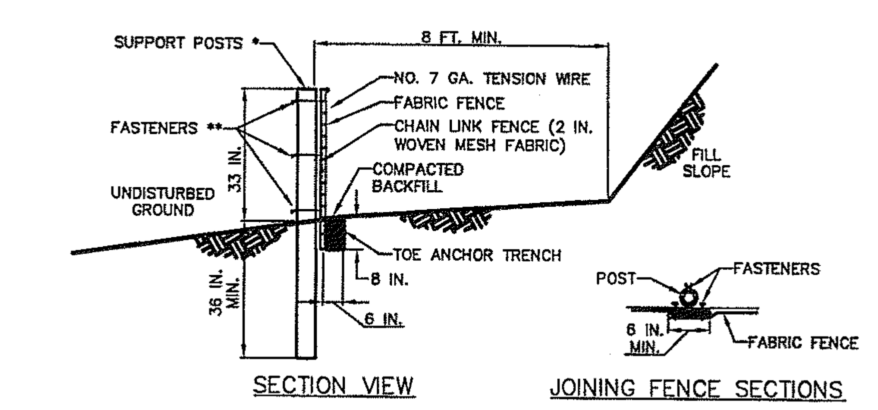

* POSTS SPACED AT 10 FT. MAX. USE 2-1/2 IN. DIA HEAVY DUTY GALVANIZED OR ALUMINUM POSTS.

** CHAIN LINK TO POST FASTENERS SPACED AT 14 IN. MAX. USE NO. 9 GA. ALUMINUM WIRE OR NO. 9 GALVANIZED STEEL WIRE. FABRIC TO SHAIN FASTENERS SPACED AT 24 IN. MAX. ON CENTER.

NOTES:

FABRIC SHALL HAVE THE MINIMUM PROPERTIES AS SHOWN IN TABLE 4.3 OF THE PA DEP EROSION CONTROL MANUAL.

FABRIC WIDTH SHALL BE 42 IN. MINIMUM.

POSTS SHALL BE INSTALLED USING A POSTHOLE DRILL.

CHAIN LINK SHALL BE GALVANIZED NO. 11.5 GA. STEEL WIRE WITH 2-1/4 IN. OPENING, NO. 11 GA. ALUMINUM COATED STEEL WIRE IN ACCORDANCE WITH ASTM-A-491, OR GALVANIZED NO. 9 GA. STEEL WIRE TOP AND BOTTOM WITH GALVANIZED NO. 11 GA. STEEL INTERMEDIATE WIRES. NO. 7 GAGE TENSION WIRE TO BE INSTALLED HORIZONTALLY THROUGH HOLES AT TOP AND BOTTOM OF CHAIN-LINK FENCE OR ATTACHED WITH HOG RINGS AT 5 FT MAX. CENTERS.

SILT FENCE SHALL BE PLACED AT LEVEL EXISTING GRADE. BOTH ENDS OF THE FENCE SHALL BE EXTENDED AT LEAST 8 FEET UP SLOPE AT 45 DEGREES TO THE MAIN FENCE ALIGNMENT.

SEDIMENT SHALL BE REMOVED WHEN ACCUMULATIONS REACH HALF THE ABOVE GROUND HEIGHT OF THE FENCE.

FENCE SHALL BE REMOVED AND PROPERLY DISPOSED OF WHEN TRIBUTARY AREA IS PERMANENTLY STABILIZED.

STANDARD CONSTRUCTION DETAIL #4-10
SUPER SILT FENCE
NOT TO SCALE

"FINAL"

NO.	DATE	DESCRIPTION	BY
8	1/9/17	REVISED PHASE "D"	JAS
7	11/9/15	REVISED PHASE "B"	JAS
6	8/12/14	REV MIDDLE CREEK ROAD	RMC
5	9/6/13	REV. PER. TWP. ENG. COMMENTS	RMC
4	8/23/13	REV. PER. TWP. ENG. LETTER DATED 7/31/13	JAS
3	6/24/13	REV. AS PER MCCD LETTER DATED 6/20/13	JAS
2	5/6/13	REV. AS PER NPDES MINOR REVISION	JAS
1	11/30/12	REV. AS PER TWP. ENG. LETTER DATED 6/6/12	JAS

RENNINGER PROPERTY SUBDIVISION
DETAILS

PREPARED FOR
GAMBONE SWAMP PIKE, L.P.
NEW HANOVER TOWNSHIP
MONTGOMERY COUNTY
PENNSYLVANIA

Chambers Associates, Inc.
Consulting Engineers and Surveyors
2962 Skippack Pike P.O. Box 678
Worcester, PA 19490-0678
484-991-8187

SCALE	DATE	JOB	DRAWING NO.
N.T.S.	4/27/12	485-084	SHEET 22 of 54
MANAGER: JPH			DRAWN BY: JAS

RICOH MP CW2200 PS

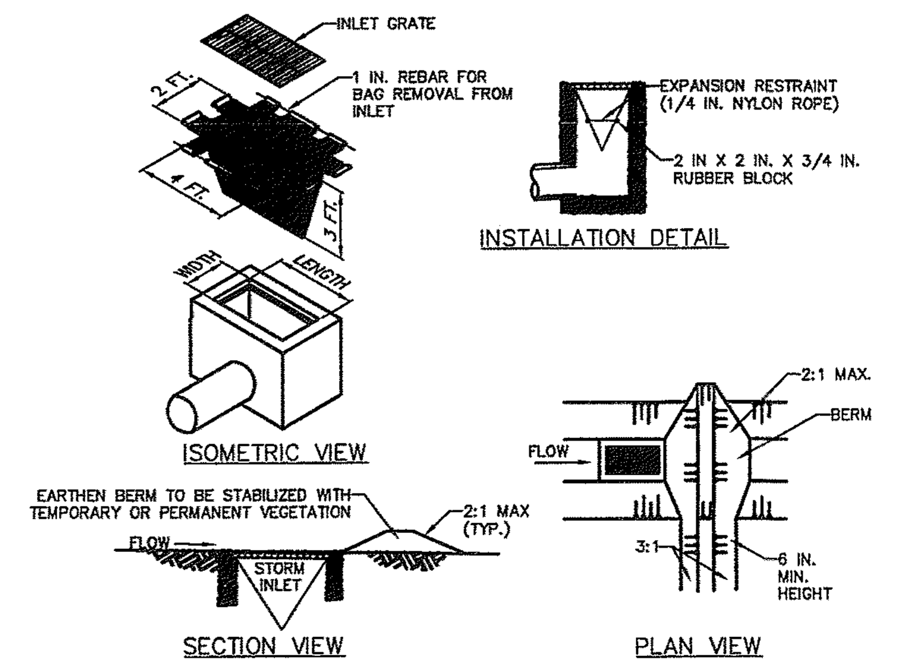

NOTES:

MAXIMUM DRAINAGE AREA = 1/2 ACRE.

INLET PROTECTION SHALL NOT BE REQUIRED FOR INLET TRIBUTARY TO SEDIMENT BASIN OR TRAP. BERMS SHALL BE REQUIRED FOR ALL INSTALLATIONS.

ROLLED EARTHEN BERM IN ROADWAY SHALL BE MAINTAINED UNTIL ROADWAY IS STONED. ROAD SUBBASE BERM ON ROADWAY SHALL BE MAINTAINED UNTIL ROADWAY IS PAVED. EARTHEN BERM IN CHANNEL SHALL BE MAINTAINED UNTIL PERMANENT STABILIZATION IS COMPLETED OR REMAIN PERMANENTLY.

AT A MINIMUM, THE FABRIC SHALL HAVE A MINIMUM GRAB TENSILE STRENGTH OF 120 LBS., A MINIMUM BURST STRENGTH OF 200 PSI, AND A MINIMUM TRAPEZOIDAL TEAR STRENGTH OF 50 LBS. FILTER BAGS SHALL BE CAPABLE OF TRAPPING ALL PARTICLES NOT PASSING A NO. 40 SIEVE.

INLET FILTER BAGS SHALL BE INSPECTED ON A WEEKLY BASIS AND AFTER EACH RUNOFF EVENT. BAGS SHALL BE EMPTIED AND RINSED OR REPLACED WHEN HALF FULL OR WHEN FLOW CAPACITY HAS BEEN REDUCED SO AS TO CAUSE FLOODING OR BYPASSING OF THE INLET. DAMAGED OR CLOGGED BAGS SHALL BE REPLACED. A SUPPLY SHALL BE MAINTAINED ON SITE FOR REPLACEMENT OF BAGS. ALL NEEDED REPAIRS SHALL BE INITIATED IMMEDIATELY AFTER THE INSPECTION. DISPOSE ACCUMULATED SEDIMENT AS WELL AS ALL USED BAGS ACCORDING TO THE PLAN NOTES.

DO NOT USE ON MAJOR PAVED ROADWAYS WHERE PONDING MAY CAUSE TRAFFIC HAZARDS.

STANDARD CONSTRUCTION DETAIL #4-16
FILTER BAG INLET PROTECTION - TYPE M INLET
NOT TO SCALE

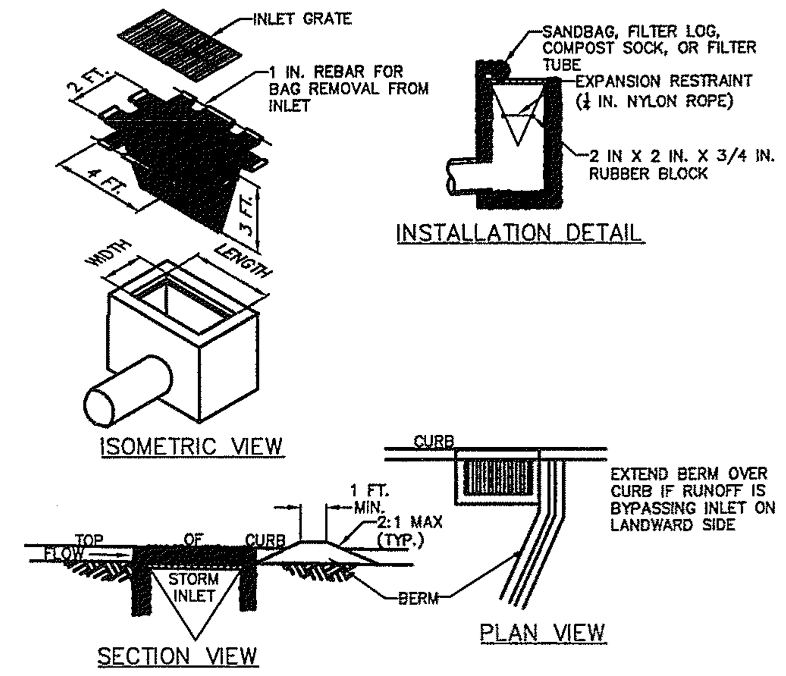

NOTES:

MAXIMUM DRAINAGE AREA = 1/2 ACRE.

INLET PROTECTION SHALL NOT BE REQUIRED FOR INLET TRIBUTARY TO SEDIMENT BASIN OR TRAP. BERMS SHALL BE REQUIRED FOR ALL INSTALLATIONS.

ROLLED EARTHEN BERM SHALL BE MAINTAINED UNTIL ROADWAY IS STONED. ROAD SUBBASE BERM SHALL BE MAINTAINED UNTIL ROADWAY IS PAVED. SIX INCH MINIMUM HEIGHT ASPHALT BERM SHALL BE MAINTAINED UNTIL ROADWAY SURFACE RECEIVES FINAL COAT.
AT A MINIMUM, THE FABRIC SHALL HAVE A MINIMUM GRAB TENSILE STRENGTH OF 120 LBS, A MINIMUM BURST STRENGTH OF 200 PSI, AND A MINIMUM TRAPEZOIDAL TEAR STRENGTH OF 50 LBS. FILTER BAGS SHALL BE CAPABLE OF TRAPPING ALL PARTICLES NOT PASSING A NO. 40 SIEVE.

INLET FILTER BAGS SHALL BE INSPECTED ON A WEEKLY BASIS AND AFTER EACH RUNOFF EVENT. BAGS SHALL BE EMPTIED AND RINSED OR REPLACED WHEN HALF FULL OR WHEN FLOW CAPACITY HAS BEEN REDUCED SO AS TO CAUSE FLOODING OR BYPASSING OF THE INLET. DAMAGED OR CLOGGED BAGS SHALL BE REPLACED. A SUPPLY SHALL BE MAINTAINED ON SITE FOR REPLACEMENT OF BAGS. ALL NEEDED REPAIRS SHALL BE INITIATED IMMEDIATELY AFTER THE INSPECTION. DISPOSE OF ACCUMULATED SEDIMENT AS WELL AS ALL USED BAGS ACCORDING TO THE PLAN NOTES.

DO NOT USE ON MAJOR PAVED ROADWAYS WHERE PONDING MAY CAUSE TRAFFIC HAZARDS.

STANDARD CONSTRUCTION DETAIL #4-15
FILTER BAG INLET PROTECTION - TYPE C INLET
NOT TO SCALE

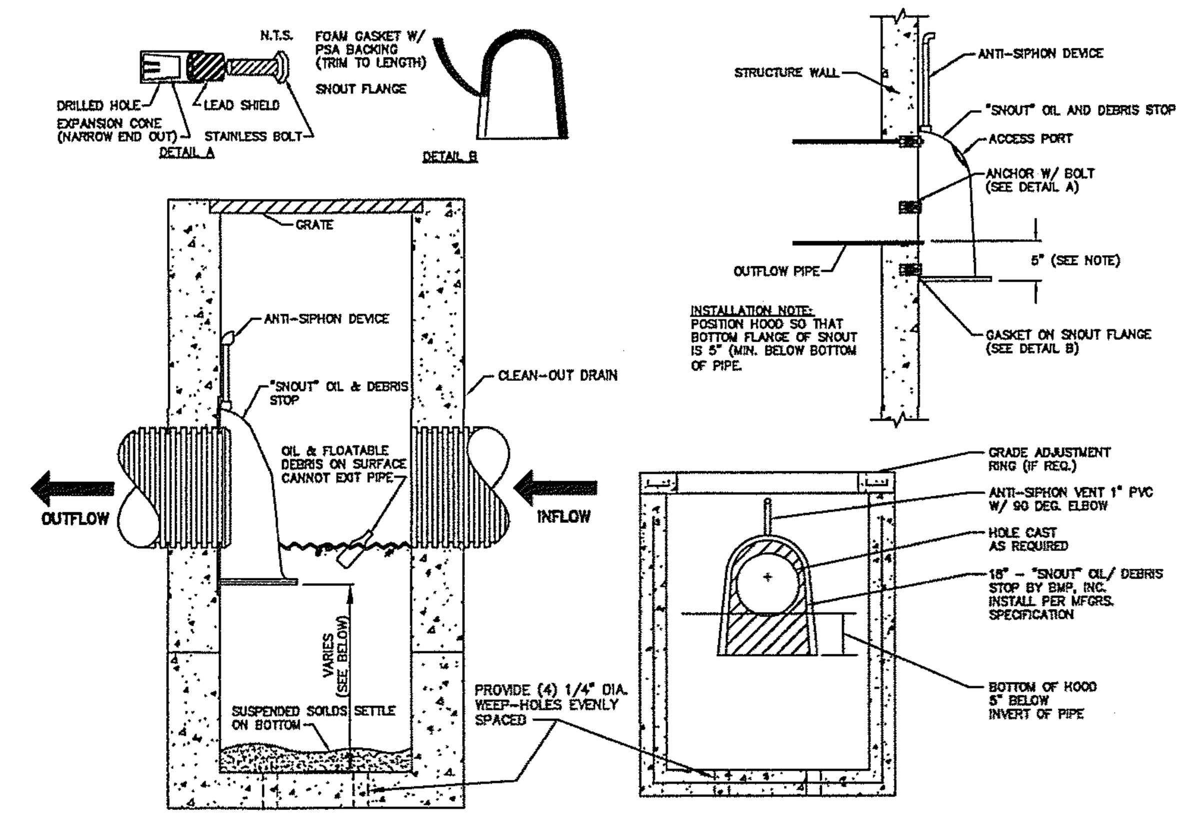

WATER QUALITY INLET STRUCTURE

INLET	SUMP	BOTTOM ELEV.	SNOUT
B-8	5.3'	284.70'	18F
B-10	4.0'	284.50'	18F
A-5A	4.0'	274.60'	18F
A-10A	4.0'	279.35'	18F

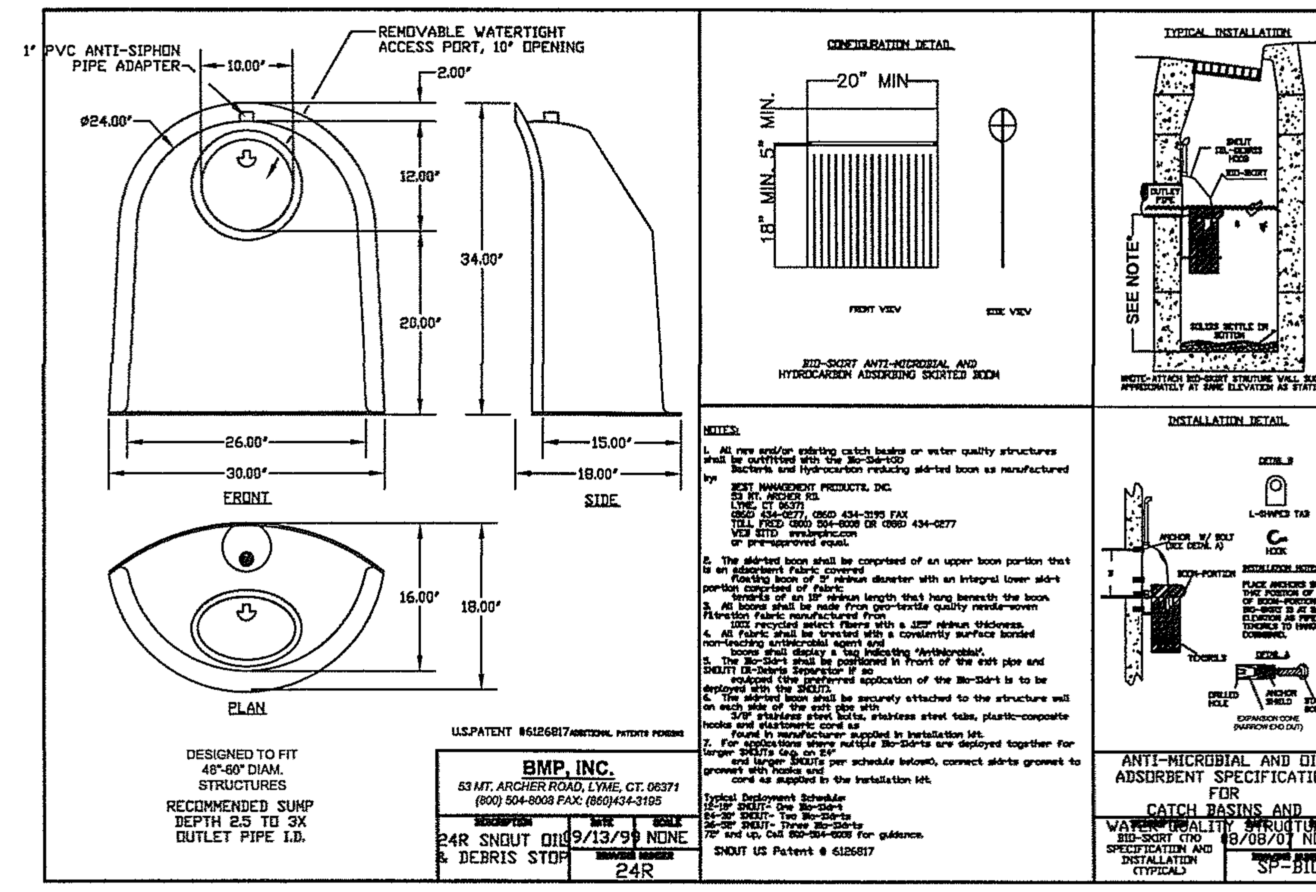

I-C15, I-C17, D-2

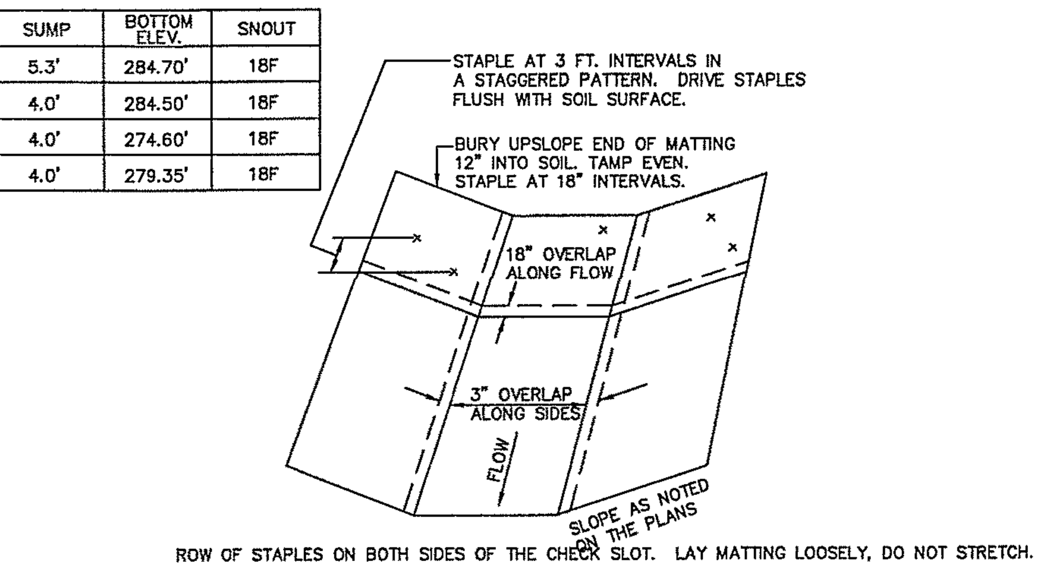

ROW OF STAPLES ON BOTH SIDES OF THE CHECK SLOT. LAY MATTING LOOSELY, DO NOT STRETCH.
LINING INSTALLATION

- * CONSTRUCT INTERMEDIATE CHECK SLOT ANCHORAGE EVERY 25 FT. TUCK 2 OR 3 FOLDS OF MAT INTO A 6" DEEP SLOT DUG PERPENDICULAR TO THE FLOW DIRECTION. PLACE AN
- * ALSO REFER TO MANUFACTURES' LINING INSTALLATION DETAIL AND VEGETATIVE STABILIZATION SPECIFICATIONS FOR SOIL AMENDMENTS, SEED MIXTURES, AND MULCHING INFORMATION.

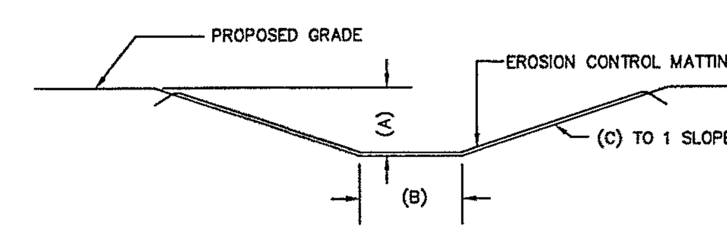

SWALE	(A)	(B)	(C)	(D)
A	15"	2'	3	S150
B	15"	2'	3	S150
C	18"	2'	3	S150
D	15"	2'	3	S150
E	15"	2'	3	S150

TEMPORARY SWALE SECTION

SNOUT MAINTENANCE AND INSPECTION ISSUES

FIRST YEAR ONLY RECOMMENDATIONS:
- Monthly monitoring of a new installation after the site has been stabilized.
- Measurements should be taken after each rain event of .5 inches or more, or monthly, as determined by local weather conditions.
- Checking sediment depth and noting the surface pollutants in the structure will be helpful in planning maintenance. Rainfall volume vs. sediment and debris capture can then be plotted as an accurate predictor of service intervals.

FOR ONGOING MAINTENANCE AFTER FIRST YEAR:
- The pollutants collected in SNOUT equipped structures will consist of floatable debris, trash and oils on the surface of the captured water, and grit and sediment on the bottom of the structure.
- It is best to schedule maintenance based on the solids collected in the sump.
- Optimally, the structure should be cleaned when the sump is half full (e.g. when 2 feet of material collects in a 4 foot sump, clean it out).
- For Floatables and Trash only (with or without TrashScreen), service when 6" of floating materil accumulates on surface above static water level.
- Structures should also be cleaned if a spill or other incident causes a larger than normal accumulation of pollutants in a structure.
- Maintenance is best done with a vacuum truck.
- If Bio-Skirts™ are being used in the structure to enhance hydrocarbon capture and/or bacteria removals, they should be checked on a monthly basis, and serviced or replaced when more than 2/3 of the boom is submerged, indicating a nearly saturated state. Assuming a typical pollutant-loading environment exists, Bio-Skirts should be serviced* or replaced annually.
- In the case of an oil spill, the structure should be serviced and Bio-Skirts replaced (if any) immediately
- All collected wastes must be handled and disposed of according to local environmental requirements.
- To maintain the SNOUT hoods themselves, an annual inspection of the anti-siphon vent and access hatch are recommended. A simple flushing of the vent, or a gentle rodding with a flexible wire are all that's typically needed to maintain the anti-siphon properties. Opening and closing the access hatch once a year ensures a lifetime of trouble-free service.
- To maintain TrashScreen, hose off debris from screen (if any) prior to removal of pollutants by vacuum truck.

CONDITION	FORMULA AND SPECIES	% BY WEIGHT	MINIMUM % PURITY	MINIMUM % GERMINATION	MAX. % WEED SEED	SEEDING RATE LBS. PER 1000 SY.
LAWN AREAS LESS THEN 3 TO 1	FORMULA B • PERENNIAL RYEGRASS MIXTURE (LOIUM PERENNE) A COMBINATION OF IMPROVED CERTIFIED VARIETIES WITH NO ONE VARIETY EXCEEDING 50% OF THE TOTAL.	20	98	90	0.15	21.0 TOTAL 4.0
	• CREEPING RED FESCUE OR CHEWINGS FESCUE	30	98	85	0.15	6.0
	• KENTUCKY BLUEGRASS MIXTURE (POA PRATENSIS) A COMBINATION OF IMPROVED CERTIFIED VARIETIES WITH NO ONE VARIETY EXCEEDING 25% OF THE TOTAL.	50	98	80	0.20	11.0 21.0
LAWN AREAS GREATER THEN 3 TO 1	FORMULA C • CROWNVETCH (CORONILLA VARIA)	45	99	70	0.10	9.0 TOTAL 4.0
	• ANNUAL RYEGRASS (LOLIUM MULTIFLORUM)	55	98	90	0.15	5.0 9.0
PERMANENT SWALES	FORMULA D • TALL FESCUE (FESTUCA ARUNDINACEA VAR. KENTUCKY 31)	70	98	85	0.15	21.0 TOTAL 15.0
	• CREEPING RED FESCUE OR CHEWINGS FESCUE	30	98	85	0.15	6.0 21.0
TEMPORARY	FORMULA E • ANNUAL RYEGRASS (LOLIUM MULTIFLORUM)	100	98	90	0.15	10.0 TOTAL 10.0

PERMANENT SEEDING

PREPARATION OF SEEDING. GRADE AS NECESSARY TO BRING THE SUBGRADE TO A TRUE, SMOOTH SLOPE PARALLEL TO AND SIX (6) INCHES BELOW FINISHED GRADE. PLACE TOPSOIL OVER SPECIFIED AREAS TO A DEPTH SUFFICIENTLY GREATER THAN SIX (6) INCHES SO THAT AFTER SETTLEMENT AND LIGHT ROLLING THE COMPLETE WORK WILL CONFORM TO LINES, GRADES AND ELEVATIONS SHOWN.

APPLY 2700 LBS./ACRE AGRICULTURAL GRADE LIMESTONE AND 5-10-5 FERTILIZER AT A RATE OF 240 LBS./ACRE.

FERTILIZER AND AGRICULTURAL LIMESTONE SHALL BE THOROUGHLY INCORPORATED INTO THE SOIL BY ROTATILLING OR OTHER METHOD TO A MINIMUM DEPTH OF FOUR (4) INCHES. THE ENTIRE SURFACE SHALL BE DONE IN TWO (2) SEPARATE OPERATIONS. THE SECOND SEEDING SHALL BE DONE IMMEDIATELY AFTER THE FIRST AND AT RIGHT AT RIGHT ANGLES TO THE FIRST SEEDING AND LIGHTLY RAKED INTO THE SOIL. MULCH SEEDED AREAS IMMEDIATELY AFTER SEEDING.

TEMPORARY SEEDING

SITE PREPARATION: APPLY 2700 LBS./ACRE AGRICULTURAL GRADE LIMESTONE AND 10-10-10 FERTILIZER AT A RATE OF 180 LBS./ACRE AND WORK IN WHERE POSSIBLE. SECURE A SOIL TEST BEFORE MAKING A PERMANENT SEEDING. AFTER SEEDING, MULCH WITH HAY OR STRAW AT A RATE OF 3 TONS PER ACRE.

GENERAL NOTES
1. ANY DISTURBED AREA ON WHICH ACTIVITY HAS CEASED MUST BE SEEDED AND MULCHED IMMEDIATELY. DURING NON-GERMINATING PERIODS, MULCH MUST BE APPLIED AT THE RECOMMENDED RATES. DISTURBED AREAS WHICH ARE NOT AT FINISHED GRADE AND WHICH WILL BE REDISTURBED WITHIN 1 YEAR MAY BE SEEDED AND MULCHED WITH A QUICK GROWING TEMPORARY SEEDING MIXTURE AND MULCH. DISTURBED AREAS WHICH ARE EITHER AT FINISHED GRADE OR WILL NOT BE REDISTURBED WITHIN 1 YEAR MUST BE SEEDED AND MULCHED WITH A PERMANENT SEED MIXTURE AND MULCH.
2. DIVERSIONS, CHANNELS, SEDIMENTATION BASINS SEDIMENT TRAPS AND STOCKPILES MUST BE SEEDED AND MULCHED IMMEDIATELY.
3. HAY OR STRAW MULCH MUST BE APPLIED AT RATES OF AT LEAST 3.0 TONS PER ACRES.

SEEDING SPECIFICATION

MAINTENANCE & INSPECTION RESPONSIBILITY

The responsibility of all maintenance & inspections related to all Best Management Practices (BMP's) will rest with The Applicant.

BMP STATEMENT

Stormwater management facilities and/or Best Management Practices (BMP) are fixtures that can be altered or removed only after the approval by the township

(OWNER)

Filtrexx® FilterSoxx™ Staking Details

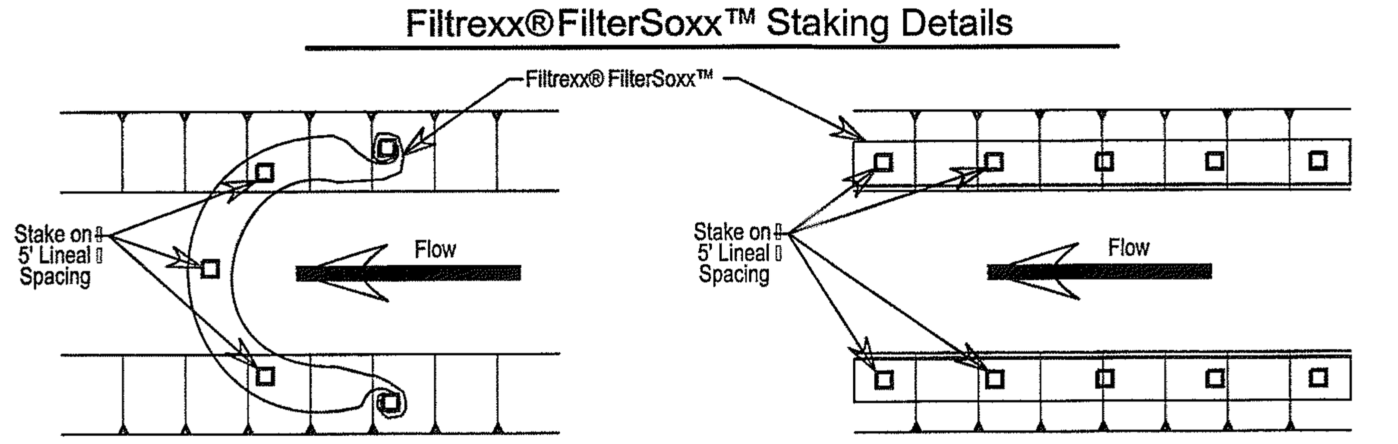

Filtrexx® DitchChexx™ Plan View

Filtrexx® EdgeSaver™ Plan View

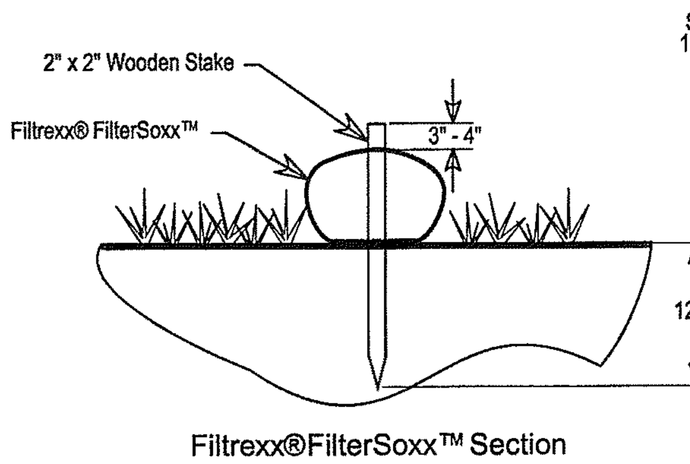

Filtrexx® FilterSoxx™ Section

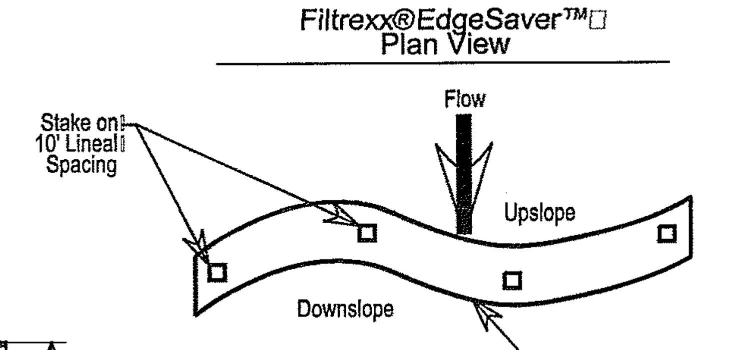

Filtrexx® SiltSoxx™ Plan View

Notes:
1. All material to meet Filtrexx® specifications .
2. FilterSoxx™ compost/jsoil/rock/seed fill to meet application requirements.
3. Compost material to be dispersed on site, as determined by Engineer.

SiltSoxx™

INSTALLATION
1. SILTSOXXTM USED FOR PERIMETER CONTROL OF SEDIMENT AND SOLUBLE POLLUTANTS IN STORM RUNOFF SHALL MEET FILTREXX SOXXTM MATERIAL SPECIFICATIONS AND USE CERTIFIED FILTREXX FILTERMEDIATM.
2. SILTSOXXTM WILL BE PLACED AT LOCATIONS INDICATED ON PLANS AS DIRECTED BY THE ENGINEER.
3. SILTSOXXTM SHOULD BE INSTALLED PARALLEL TO THE BASE OF THE SLOPE OR OTHER DISTURBED AREA. IN EXTREME CONDITIONS (I.E., 2:1 SLOPES), A SECOND SILTSOXXTM SHALL BE CONSTRUCTED AT THE TOP OF THE SLOPE.
4. STAKES SHALL BE INSTALLED THROUGH THE MIDDLE OF THE SILTSOXXTM ON 10 FT CENTERS, USING 2 IN BY 2 IN BY 3 FT WOODEN STAKES. IN THE EVENT STAKING IS NOT POSSIBLE, I.E., WHEN SILTSOXXTM ARE USED ON PAVEMENT, HEAVY CONCRETE BLOCKS SHALL BE USED BEHIND THE SILTSOXXTM TO HELP STABILIZE DURING RAINFALL/RUNOFF EVENTS.
5. STAKING DEPTH FOR SAND AND SILT LOAM SOILS SHALL BE 12 IN, AND 8 IN FOR CLAY SOILS.
6. LOOSE COMPOST MAY BE BACKFILLED ALONG THE UPSLOPE SIDE OF THE SILTSOXXTM, FILLING THE SEAM BETWEEN THE SOIL SURFACE AND THE DEVICE, IMPROVING FILTRATION AND SEDIMENT RETENTION.
7. IF THE SILTSOXXTM IS TO BE LEFT AS A PERMANENT FILTER OR PART OF THE NATURAL LANDSCAPE, IT MAY BE SEEDED AT TIME OF INSTALLATION FOR ESTABLISHMENT OF PERMANENT VEGETATION. THE ENGINEER WILL SPECIFY SEED REQUIREMENTS.
8. FILTREXX SILTSOXXTM ARE NOT TO BE USED IN PERENNIAL, EPHEMERAL, OR INTERMITTENT STREAMS.

INSPECTION AND MAINTENANCE
ROUTINE INSPECTION SHOULD BE CONDUCTED WITHIN 24 HRS OF A RUNOFF EVENT OR AS DESIGNATED BY THE REGULATING AUTHORITY. SILTSOXXTM SHOULD BE REGULARLY INSPECTED TO MAKE SURE THEY MAINTAIN THEIR SHAPE AND ARE PRODUCING ADEQUATE HYDRAULIC FLOW-THROUGH. IF PONDING BECOMES EXCESSIVE, ADDITIONAL SILTSOXXTM MAY BE REQUIRED TO REDUCE EFFECTIVE SLOPE LENGTH OR SEDIMENT REMOVAL MAY BE NECESSARY. SILTSOXXTM SHALL BE INSPECTED UNTIL AREA ABOVE HAS BEEN PERMANENTLY STABILIZED AND CONSTRUCTION ACTIVITY HAS CEASED
1. THE CONTRACTOR SHALL MAINTAIN THE SILTSOXXTM IN A FUNCTIONAL CONDITION AT ALL TIMES AND IT SHALL BE ROUTINELY INSPECTED.
2. IF THE SILTSOXXTM HAS BEEN DAMAGED, IT SHALL BE REPAIRED, OR REPLACED IF BEYOND REPAIR.
3. THE CONTRACTOR SHALL REMOVE SEDIMENT AT THE BASE OF THE UPSLOPE SIDE OF THE SILTSOXXTM WHEN ACCUMULATION HAS REACHED 1/2 OF THE EFFECTIVE HEIGHT OF THE SILTSOXXTM, OR AS DIRECTED BY THE ENGINEER. ALTERNATIVELY, A NEW SILTSOXXTM CAN BE PLACED ON TOP OF AND SLIGHTLY BEHIND THE ORIGINAL ONE CREATING MORE SEDIMENT STORAGE CAPACITY WITHOUT SOIL DISTURBANCE.
4. SILTSOXXTM SHALL BE MAINTAINED UNTIL DISTURBED AREA ABOVE THE DEVICE HAS BEEN PERMANENTLY STABILIZED AND CONSTRUCTION ACTIVITY HAS CEASED.

Filtrexx® SiltSoxx™ Details

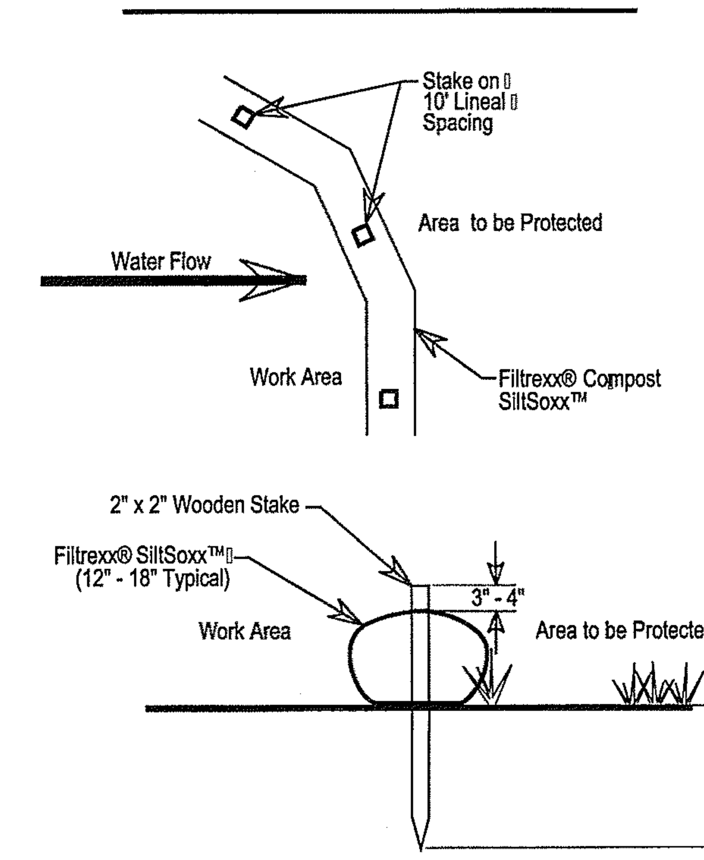

Notes:
1. All material to meet Filtrexx® specifications .
2. SiltSoxx™ compost/jsoil/rock/seed fill to meet application requirements.
3. SiltSoxx™ depicted is for minimum slopes. Greater slopes may require larger socks per the Engineer.
4. Compost material to be dispersed on site, as determined by Engineer.

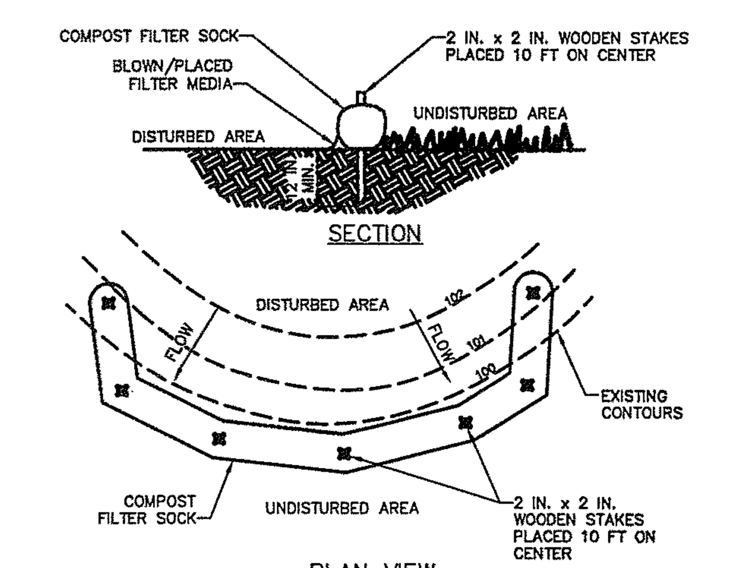

NOTES:
SOCK FABRIC SHALL MEET STANDARDS OF TABLE 4.1 OF THE PA DEP EROSION CONTROL MANUAL. COMPOST SHALL MEET THE STANDARDS OF TABLE 4.2 OF THE PA DEP EROSION CONTROL MANUAL.
COMPOST FILTER SOCK SHALL BE PLACED AT EXISTING LEVEL GRADE. BOTH ENDS OF THE BARRIER SHALL BE EXTENDED AT LEAST 8 FEET UP SLOPE AT 45 DEGREES TO THE MAIN BARRIER ALIGNMENT. MAXIMUM SLOPE LENGTH ABOVE ANY BARRIER SHALL NOT EXCEED THAT SPECIFIED FOR THE SIZE OF THE SOCK AND THE SLOPE OF ITS TRIBUTARY AREA.
TRAFFIC SHALL NOT BE PERMITTED TO CROSS COMPOST FILTER SOCKS.
ACCUMULATED SEDIMENT SHALL BE REMOVED WHEN IT REACHES 1/2 THE ABOVE GROUND HEIGHT OF THE BARRIER AND DISPOSED IN THE MANNER DESCRIBED ELSEWHERE IN THE PLAN.
COMPOST FILTER SOCKS SHALL BE INSPECTED WEEKLY AND AFTER EACH RUNOFF EVENT. DAMAGED SOCKS SHALL BE REPAIRED ACCORDING TO MANUFACTURER'S SPECIFICATIONS OR REPLACED WITHIN 24 HOURS OF INSPECTION.
BIODEGRADABLE COMPOST FILTER SOCKS SHALL BE REPLACED AFTER 6 MONTHS; PHOTODEGRADABLE SOCKS AFTER 1 YEAR. POLYPROPYLENE SOCKS SHALL BE REPLACED ACCORDING TO MANUFACTURER'S RECOMMENDATIONS.
UPON STABILIZATION OF THE AREA TRIBUTARY TO THE SOCK, STAKES SHALL BE REMOVED. THE SOCK MAY BE LEFT IN PLACE AND VEGETATED OR REMOVED. IN THE LATTER CASE, THE MESH SHALL BE CUT OPEN AND THE MULCH SPREAD AS A SOIL SUPPLEMENT.

STANDARD CONSTRUCTION DETAIL #4-1
COMPOST FILTER SOCK
NOT TO SCALE

"FINAL"

NO.	DATE	DESCRIPTION	BY
8	1/9/17	REVISED PHASE "D"	JAS
7	11/9/15	REVISED PHASE "B"	JAS
6	8/12/14	REV MIDDLE CREEK ROAD	RMC
5	9/6/13	REV. PER. TWP. ENG. COMMENTS	RMC
4	8/23/13	REV. PER. TWP. ENG. LETTER DATED 7/31/13	JAS
3	6/24/13	REV. PER TWP. ENG. LETTERS DATED 1/3/13, 2/7/13	JAS
2	5/6/13	REV. AS PER NPDES MINOR REVISION	JAS
1	11/30/12	REV. AS PER TWP. ENG. LETTER DATED 6/6/12	JAS

RENNINGER PROPERTY SUBDIVISION
EROSION CONTROL DETAILS

PREPARED FOR
GAMBONE SWAMP PIKE, L.P.
NEW HANOVER TOWNSHIP
MONTGOMERY COUNTY
PENNSYLVANIA

Chambers Associates, Inc.
Consulting Engineers and Surveyors
2962 Skippack Pike P.O. Box 678
Worcester, PA 19490-0678
484-991-8187

SCALE	DATE	JOB	DRAWING NO.
N.T.S.	4/27/12	485-084	SHEET 23 of 54
MANAGER: JPH		DRAWN BY: JAS	

STORMWATER BASIN PLANTING SCHEDULE

	COMMON NAME	BOTANICAL NAME	TYPE	HYD. ZONE	QUANTITY	SIZE
A	SENSITIVE FERN	ONOCLEA SENSIBILIS	FERN	(3,4),5	325	2" PLUG
B	WILD COLUMBINE	EQUILEGIA CANADENSIS	FORB	(4,5),6	325	2" PLUG
C	PURPLE JOE PYE WEED	EUPATORIUM PURPUREUM	FORB	3,4(5,6)	325	2" PLUG
D	COMMON BUTTONBUSH	CEPHALANTHUS OCCIDENTALIS	SHRUB	(1,2),3	42	#3-18-24" HT.
E	REDTWIG DOGWOOD	CORNUS SERICIA	SHRUB	(3,4),5	55	#3-18-24" HT.
F	SPICE BUSH	LINDERA BENZOIN	SHRUB	3,4,5	14	#3-15-18" HT.
G	HIGHBUSH BLUEBERRY	VACCINIUM CORYBOSUM	SHRUB	(3,4),5,6	49	#3-15-18" HT.
H	RED MAPLE	ACER RERUM	TREE	3,4,(5)	7	#10-6-8" HT.
I	BLACK WILLOW	SALIX NIGRA	TREE	(2,3),4	3	#10-6-8" HT.
J	GREEN ASH	FRAXINUS PENNSYLVANICA	TREE	3,4,5	9	#10-6-8" HT.

NOTE: PLANT FORBS IN GROUPS (MIN 15) IN NATURALISTIC GROUPINGS ON (ZONE 4/RIPARIAN FRINGE) BASIN SLOPES.

KEY TO HYDROLOGIC ZONES FOR STORMWATER MANAGEMENT IMPROVEMENTS

HYDROLOGIC ZONE	SYMBOL	HYDROLOGIC ZONE DESCRIPTION	SITE LOCATION	HYDROLOGIC CONDITIONS	PLANTING NOTES
ZONE 1		DEEP WATER POOL	WET BASIN	4'-8' DEEP PERM. POOL	NO PLANTING THIS ZONE
ZONE 2		SHALLOW WATER BENCH	WET BASIN PERIMETER BENCH	6" -12" DEEP	PLANTS PER ADJACENT BENCH PLANT SCHEDULE
ZONE 3		SHORELINE FRINGE/MARSH	FOREBAYS	REGULARLY INUNDATED	SEED MIX-SEE SHEET 24 PLANTS-SEE BASIN PLANT SCHEDULE
ZONE 4		RIPARIAN FRINGE	INFILTRATION BERMS, DRY SWALES	PERIODICALLY INUNDATED	SEED MIX-SEE SHEET 24 PLANTS-SEE BASIN PLANT SCHEDULE
ZONE 5		FLOODPLAIN TERRACE	N/A	INFREQUENTLY INUNDATED	
ZONE 6		UPLAND TERRACE	UPLAND SLOPES THAT SURROUND STORMWATER BASINS	SELDOM/NEVER INUNDATED	SEED MIX-SEE SHEET 24 PLANTS-SEE BASIN PLANT SCHEDULE

LANDSCAPE NOTES

1. PLANT MATERIAL SHALL BE OF NURSERY STOCK, BALLED AND BURLAPPED. IT SHALL BE OF SYMMETRICAL GROWTH, FREE OF INSECTS, PESTS AND DISEASE, AND DURABLE UNDER THE MAINTENANCE CONTEMPLATED.
2. ALL PLANTING MATERIALS SHALL MEET THE MINIMUM STANDARDS OF THE AMERICAN ASSOCIATION OF NURSERYMEN.
3. TREES SHALL NOT PLANTED WITHIN 5' OF ANY STORM, SANITARY, OR WATER LINES.
4. TREES AND OTHER REQUIRED PLANT MATERIAL SHALL NOT BE PLANTED UNTIL THE FINISHED GRADING OF THE LAND DEVELOPMENT HAS BEEN COMPLETED.

BMP NOTE:

THE RESULTS OF ANNUAL STORMWATER INFRASTRUCTURE AND BMP INSPECTIONS AND OTHER ROUTINE MAINTENANCE OR INSPECTIONS *(DESCRIBED ON THE POST CONSTRUCTION STORMWATER MANAGEMENT PLAN)* PERFORMED BY THE HOMEOWNERS ASSOCIATION MUST BE REPORTED TO NEW HANOVER TOWNSHIP ON AN ANNUAL BASIS BY THE HOMEOWNERS ASSOCIATION.
THE REPORTING PERIOD FOR SUCH DATA SHALL BE FROM MARCH 10 TO MARCH 9 THE FOLLOWING YEAR. ALL REPORTS MUST BE SUBMITTED TO THE TOWNSHIP BY MARCH 15 OR THE FIRST BUSINESS DAY AFTER MARCH 15, WHICHEVER IS FIRST.

WETLAND MITIGATION PLANTING SCHEDULE

SYMBOL	QUANTITY	BOTANICAL NAME	COMMON NAME	SIZE
TREES				
GA	20	FRAXINUS PENNSYLVANICA	GREEN ASH	4'-6' SAPLING
SWO	20	QUERCUS BICOLOR	SWAMP WHITE OAK	4'-6' SAPLING
SG	20	LIQUIDAMBAR STYRACIFLUA	SWEET GUM	4'-6' SAPLING
SHRUBS				
AW	30	VIBURNUM DENTATUM	ARROWWOOD	18"
BB	30	CEPHALANTHUS OCCIDENTALIS	BUTTONBUSH	18"
SD	30	CORNUS AMMOMUM	SILKY DOGWOOD	18"

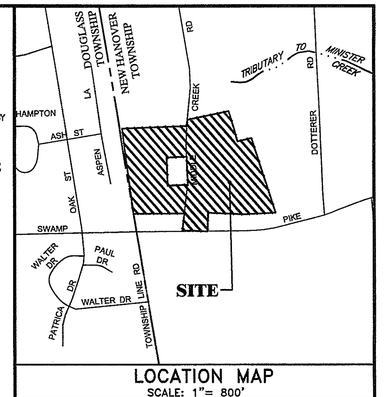

LOCATION MAP
SCALE: 1"= 800'

GENERAL MAINTENANCE:

THE FOLLOWING RECOMMENDATIONS ARE OFFERED FOR MONITORING AND MAINTENANCE OF BASIN GRASS AREAS:

MONITORING AND CONTROLLING CRASSY WEEDS OR PERSISTENT PERENNIALS IS ESSENTIAL IN THE FIRST AND SECOND YEARS. BURNING (BY EXPERIENCING PROFESSIONALS) ABOUT EVERY THREE YEARS IN EARLY SPRING CAN PREVENT SHRUB INVASION.

FIRST YEAR MAINTENANCE:

WHEN UNDESIRABLE WEED VEGETATION REACHES 12"-18" TALL, MOW TO NO LESS THAN 6" (WITH A MOWER AND/OR WEED EATER) TO PREVENT THE WEEDS FROM DEVELOPING SEED. THIS ALLOWS SUNLIGHT TO REACH DESIRED SPECIES.

SECOND YEAR MAINTENANCE:

NOW ONCE, CLOSE TO THE GROUND, IN EARLY SPRING. THIS WILL ENCOURAGE YOUNG NATIVE PLANTS TO EMERGE AND RAPID WARMING OF THE SOIL.

THE FOLLOWING RECOMMENDATIONS ARE OFFERED FOR MONITORING AND MAINTENANCE OF TURF GRASS AREAS:

BEGIN MAINTENANCE IMMEDIATELY AFTER EACH AREA IS PLANTED AND CONTINUE UNTIL ACCEPTABLE LAWN IS ESTABLISHED, BUT NOT FOR LESS THAN 60 DAYS FROM DATE OF SUBSTANTIAL COMPLETION.

MAINTAIN AND ESTABLISH LAWN BY WATERING, FERTILIZING, WEEDING, MOWING, TRIMMING, REPLANTING, AND OTHER OPERATIONS. ROLL, REGRADE AND REPLANT BARE OR ERODED AREAS AND RE-MULCH TO PRODUCE A UNIFORMLY SMOOTH LAWN. (IN AREAS WHERE MULCH HAS BEEN DISTURBED BY WIND OR MAINTENANCE OPERATIONS, ADD NEW MULCH. ANCHOR AS REQUIRED TO PREVENT DISPLACEMENT.

WATERING: PROVIDE AND MAINTAIN TEMPORARY PIPING, HOSES, AND LAWN WATERING EQUIPMENT TO CONVEY WATER FROM SOURCES AND TO KEEP LAWN UNIFORMLY MOIST TO A DEPTH OF 4 INCHES. SCHEDULE WATERING TO PREVENT WILTING, PUDDLING, EROSION, AND DISPLACEMENT OF SEED OR MULCH. LAY OUT TEMPORARY WATERING SYSTEM TO AVOID WALKING OVER MUDDY OR NEWLY PLANTED AREAS. WATER LAWN AT A MINIMUM RATE OF 1 INCH PER WEEK.

MOW LAWN AS SOON AS TOP GROWTH IS TALL ENOUGH TO CUT. REPEAT MOWING TO MAINTAIN SPECIFIED HEIGHT WITHOUT CUTTING MORE THAN 40 PERCENT OF GRASS HEIGHT. REMOVE NO MORE THAN 40 PERCENT OF GRASS-LEAF GROWTH IN INITIAL OR SUBSEQUENT MOWINGS. DO NOT DELAY MOWING UNTIL GRASS BLADES BEND OVER AND BECOME MATTED. DO NOT MOW WHEN GRASS IS WET. SCHEDULE INITIAL AND SUBSEQUENT MOWINGS TO MAINTAIN THE GRASS 2 TO 3 INCHES HIGH.

LAWN POST-FERTILIZATION: APPLY FERTILIZER AFTER INITIAL MOWING AND WHEN GRASS IS DRY.

LEGEND

SYMBOL	DESCRIPTION
o	EXISTING IRON PIN (UNLESS OTHERWISE NOTED)
	EXISTING GRADE
	PROPOSED GRADE
	EXISTING STORM SEWER
	PROPOSED STORM SEWER
	EXISTING SANITARY SEWER
	PROPOSED SANITARY SEWER
W W	EXISTING WATER LINE
E E	EXISTING ELECTRIC LINE
OE OE	EXISTING OVERHEAD ELECTRIC LINE
G G	EXISTING GAS LINE
T T	EXISTING TELEPHONE LINE
W W	PROPOSED WATER SERVICE
WL WL	PROPOSED WATER SERVICE LATERAL
L L	EXISTING SANITARY SEWER LATERAL
L L	PROPSED SANITARY SEWER LATERAL

"FINAL"

80 0 80 160 240
GRAPHIC SCALE

NO.	DATE	DESCRIPTION	BY
9	1/9/17	REVISED PHASE "D"	JAS
8	11/9/15	REVISED PHASE "B"	JAS
7	8/12/14	REV MIDDLE CREEK ROAD	RMC
6	12/20/13	REV. PER NPDES RENEWAL	RMC
5	9/6/13	REV. PER TWP. ENG. COMMENTS	RMC
4	8/23/13	REV. PER TWP. ENG. LETTER DATED 7/31/13	JAS
3	6/24/13	REV. PER TWP. ENG. LETTERS DATED 1/3/13, 2/7/13	JAS
2	5/6/13	REV. AS PER NPDES MINOR REVISION	JAS
1	11/30/12	REV. AS PER TWP. ENG. LETTER DATED 6/6/12	JAS

RENNINGER PROPERTY SUBDIVISION
OVERALL POST CONSTRUCTION STORMWATER MANAGEMENT PLAN

PREPARED FOR
GAMBONE SWAMP PIKE, L.P.
NEW HANOVER TOWNSHIP
MONTGOMERY COUNTY
PENNSYLVANIA

Chambers Associates, Inc.
Consulting Engineers and Surveyors
2962 Skippack Pike P.O. Box 678
Worcester, PA 19490-0678
484-991-8187

SCALE	DATE	JOB	DRAWING NO.
1"=80'	4-27-12	485-084	SHEET 24 of 54
MANAGER: JPH		DRAWN BY: JAS	

TEST PIT #	EX. GROUND ELEV. (ft)	DEPTH TO WATER TABLE (in)	WATER ELEV. (ft)	DEPTH TO ROCK (in)	ROCK ELEV. (ft)	INFILTRATION RATE (in/hr)
1	279.36	77.0	272.94	77.0	272.94	--
2	288.16	9.0	287.41	87.0	280.91	0.09
3	286.93	72.0	280.93	72.0	280.93	0.05
4	291.50	16.0	290.17	43.0	287.92	0.17
5	291.40	7.0	290.82	30.0	288.90	--
6	292.26	90.0	284.76	90.0	284.76	--
7	288.19	--	--	24.0	286.19	--
8	285.14	16.0	283.81	30.0	282.64	--
9	283.34	29.0	280.92	29.0	280.92	0.01
10	271.22	14.0	270.05	50.0	267.05	0.00
11	270.95	--	--	33.0	268.20	0.00
13	274.87	--	--	32.0	272.20	0.01
14	282.00	--	--	36.0	279.00	0.00
15	290.00	20.0	288.33	28.0	287.83	--
16	292.50	22.0	290.67	32.0	289.83	--
17	295.26	67.0	289.66	76.0	288.76	--
18	294.16	16.0	292.83	38.0	291.00	0.02

L:\Projects\485084\Engineering\Submission\SUBMISSION SET OF PLANS 1-9-17\DETS 24-29 revised 9-20-13.dwg, 24, 1/20/2017 11:51:16 AM, Hewlett-Packard Company

BMP NOTE:

THE RESULTS OF ANNUAL STORMWATER INFRASTRUCTURE AND BMP INSPECTIONS AND OTHER ROUTINE MAINTENANCE OR INSPECTIONS (DESCRIBED ON THE POST CONSTRUCTION STORMWATER MANAGEMENT PLAN) PERFORMED BY THE HOMEOWNERS ASSOCIATION MUST BE REPORTED TO NEW HANOVER TOWNSHIP ON AN ANNUAL BASIS BY THE HOMEOWNERS ASSOCIATION. THE REPORTING PERIOD FOR SUCH DATA SHALL BE FROM MARCH 10 TO MARCH 9 THE FOLLOWING YEAR. ALL REPORTS MUST BE SUBMITTED TO THE TOWNSHIP BY MARCH 15 OR THE FIEST BUSINESS DAY AFTER MARCH 15, WHICHEVER IS FIRST.

BMP: DETENTION BASIN

SEE STORMWATER BASIN PLANTING SCHEDULE SHEET 24

LIMITS OF DISTURBANCE 26.9 Ac.

50' STREAM CORRIDOR SETBACK

N/L WINDLESTRAE ASSOCIATES DBV 5427 PG 1698 PARCEL# 4700-05-02-0009

RAIN GARDEN NO. 1

STORMWATER BASIN 1D (SHALLOW)

TOP OF BERM EL. 287.25

BOTTOM OF BASIN EL. 283.25

24" STONE SUB-SURFACE BASIN 1 EL. 280.25

ROAD 'A'

MIDDLE CREEK ROAD

MIDDLE CREEK RD 7+83.37 = ROAD 'C' 9+41.41

CONNECT TO PROPOSED SHAMPTON WINDLESTRAE DEVELOPMENT

EXISTING SAN MH 63-28-7 RIM 271.74 INV 263.56 INV 263.76 (INSTALLED BY OTHERS) CONTRACTOR TO VERIFY ELEVATIONS PRIOR TO CONSTRUCTION

NOTE: THE INSTALLATION OF SMH-C4 AND THE SANITARY SEWER MAIN TO THE EXISTING MANHOLE IN MIDDLE CREEK ROAD WILL BE PART OF THE PHASE 'A' IMPROVEMENTS. CONTRACTOR TO INSTALL A 5 FT. LONG 8" PVC SDR-35 STUB WITH A WATERTIGHT CAP FOR FUTURE CONNECTION DURING CONSTRUCTION OF PHASE 'B'

NOTE: THE INSTALLATION OF SMH-MC1 WILL BE PART OF THE PHASE 'B' IMPROVEMENTS. CONTRACTOR TO INSTALL A 5 FT. LONG 8" PVC SDR-35 STUB WITH A WATERTIGHT CAP FOR FUTURE CONNECTION

TEMPORARY CONSTRUCTION EASEMENT

N/L WILLIAM L. & CRYSTALYN A. NORRIS DBV 4786 PG 1787 PARCEL#4700-05-03-2006

N/L DAVID J. & WENDY SCIBETTA DBV 4891 PG 468 PARCEL#3200-00-27-3343

N/L GORDON & MARY P. GEISSLER DBV 4908 PG 458 PARCEL#3200-00-27-3325

N/L JANET M. CHRISTY DBV 2482 PG 3388

N/L GREGORY D. SERRATORE & ANNA L. HARRINGTON DBV 5205 PG 2475 PIN #3200-00-27-3361

TP#14 TP#17 TP#18

TP#1

PT 3+64.44

PC 10+50

PT 12+98.31

PC 11+50

PT 8+50

PC 7+50

PT 6+50

PC 5+50

PT 4+50

PC 3+50

PT 2+50

PC 1+50

PT 0+00

PC 0+00

LOCATION MAP

SCALE: 1" = 800'

SITE

DOUGLASS TOWNSHIP, NEW HANOVER TOWNSHIP, TRIBUTARY TO MINISTER CREEK, ASH ST, OAK ST, ASPEN CREEK, DOTTERER RD, SWAMP PIKE, WALTER DR, PAUL DR, PATRICIA DR, TOWNSHIP LINE RD

GENERAL MAINTENANCE:

THE FOLLOWING RECOMMENDATIONS ARE OFFERED FOR MONITORING AND MAINTENANCE OF BASIN GRASS AREAS:

MONITORING AND CONTROLLING GRASSY WEEDS OR PERSISTENT PERENNIALS IS ESSENTIAL IN THE FIRST AND SECOND YEARS. BURNING (BY EXPERIENCING PROFESSIONALS) ABOUT EVERY THREE YEARS IN EARLY SPRING CAN PREVENT SHRUB INVASION.

FIRST YEAR MAINTENANCE:

WHEN UNDESIRABLE WEED VEGETATION REACHES 12"-18" TALL, MOW TO NO LESS THAN 6" (WITH A MOWER AND/OR WEED EATER) TO PREVENT THE WEEDS FROM DEVELOPING SEED. THIS ALLOWS SUNLIGHT TO REACH DESIRED SPECIES.

SECOND YEAR MAINTENANCE:

MOW ONCE, CLOSE TO THE GROUND, IN EARLY SPRING. THIS WILL ENCOURAGE YOUNG NATIVE PLANTS TO ENCHOE AND RAPID WARMING OF THE SOIL.

THE FOLLOWING RECOMMENDATIONS ARE OFFERED FOR MONITORING AND MAINTENANCE OF TURF GRASS AREAS:

BEGIN MAINTENANCE IMMEDIATELY AFTER EACH AREA IS PLANTED AND CONTINUE UNTIL ACCEPTABLE LAWN IS ESTABLISHED, BUT NOT FOR LESS THAN 60 DAYS FROM DATE OF SUBSTANTIAL COMPLETION.

MAINTAIN AND ESTABLISH LAWN BY WATERING, FERTILIZING, WEEDING, MOWING, TRIMMING, REPLANTING, AND OTHER OPERATIONS. ROLL, REGRADE,AND REPLANT BARE OR ERODED AREAS AND RE-MULCH TO PRODUCE A UNIFORMLY SMOOTH LAWN. (IN AREAS WHERE MULCH HAS BEEN DISTURBED BY WIND OR MAINTENANCE OPERATIONS, ADD NEW MULCH. ANCHOR AS REQUIRED TO PREVENT DISPLACEMENT.

WATERING: PROVIDE AND MAINTAIN TEMPORARY PIPING, HOSES, AND LAWN WATERING EQUIPMENT TO CONVEY WATER FROM SOURCES AND TO KEEP LAWN UNIFORMLY MOIST TO A DEPTH OF 4 INCHES. SCHEDULE WATERING TO PREVENT WILTING, PUDDLING, EROSION, AND DISPLACEMENT OF SEED OR MULCH. LAY OUT TEMPORARY WATERING SYSTEM TO AVOID WALKING OVER MUDDY OR NEWLY PLANTED AREAS. WATER LAWN AT A MINIMUM RATE OF 1 INCH PER WEEK.

MOW LAWN AS SOON AS TOP GROWTH IS TALL ENOUGH TO CUT. REPEAT MOWING TO MAINTAIN SPECIFIED HEIGHT WITHOUT CUTTING MORE THAN 40 PERCENT OF GRASS HEIGHT. REMOVE NO MORE THAN 40 PERCENT OF GRASS-LEAF GROWTH IN INITIAL OR SUBSEQUENT MOWINGS. DO NOT DELAY MOWING UNTIL GRASS BLADES BEND OVER AND BECOME MATTED. DO NOT MOW WHEN GRASS IS WET. SCHEDULE INIRAL AND SUBSEQUENT MOWINGS TO MAINTAIN THE GRASS 2 TO 3 INCHES HIGH.

LAWN POST-FERTILIZATION: APPLY FERTILIZER AFTER INITIAL MOWING AND WHEN GRASS IS DRY.

LEGEND

SYMBOL	DESCRIPTION
o	EXISTING IRON PIN (UNLESS OTHERWISE NOTED)
	EXISTING GRADE
	PROPOSED GRADE
	EXISTING STORM SEWER
	PROPOSED STORM SEWER
	EXISTING SANITARY SEWER
	PROPOSED SANITARY SEWER
W W	EXISTING WATER LINE
E E	EXISTING ELECTRIC LINE
OE OE	EXISTING OVERHEAD ELECTRIC LINE
G G	EXISTING GAS LINE
T T	EXISTING TELEPHONE LINE
W W	PROPOSED WATER SERVICE
WL WL	PROPOSED WATER SERVICE LATERAL
L L	EXISTING SANITARY SEWER LATERAL
L L	PROPSED SANITARY SEWER LATERAL

"FINAL"

30 0 30 60 90

GRAPHIC SCALE

NO.	DATE	DESCRIPTION	BY
9	1/9/17	REVISED PHASE "D"	JAS
8	11/9/15	REVISED PHASE "B"	JAS
7	8/12/14	REV MIDDLE CREEK ROAD	RMC
6	12/20/13	REV. PER NPDES RENEWAL	RMC
5	9/9/13	REV. PER TWP. ENG. COMMENTS	RMC
4	8/23/13	REV. PER TWP. ENG. LETTER DATED 7/31/13	JAS
3	6/24/13	REV. PER TWP. ENG. LETTERS DATED 1/3/13, 2/7/13	JAS
2	5/6/13	REV. AS PER NPDES MINOR REVISION	JAS
1	11/30/12	REV. AS PER TWP. ENG. LETTER DATED 6/6/12	JAS

RENNINGER PROPERTY SUBDIVISION

POST CONSTRUCTION STORMWATER MANAGEMENT PLAN (1 of 5)

PREPARED FOR

GAMBONE SWAMP PIKE, L.P.

NEW HANOVER TOWNSHIP

MONTGOMERY COUNTY

PENNSYLVANIA

Chambers Associates, Inc.
Consulting Engineers and Surveyors
2962 Skippack Pike P.O. Box 678
Worcester, PA 19490-0678
484-991-8167

SCALE	DATE	JOB	DRAWING NO.
1"=30'	4-27-12	485-084	SHEET 25 of 54
MANAGER: JPH		DRAWN BY: JAS	

L:\Projects\485084\plb-4x4mm\dwg\SUBDIVISION SET\SP-PLAN1 1-9-17(2017)13-3-29-mmed-3.plb-3.4.dwg, 3.5, 1/9/2017 7:15:53 AM, ACCN-PHOOD0618

NOTE: SEE STORMWATER BASIN PLANTING SCHEDULE SHEET 24.

BMP NOTE:

THE RESULTS OF ANNUAL STORMWATER INFRASTRUCTURE AND BMP INSPECTIONS AND OTHER ROUTINE MAINTENANCE OR INSPECTIONS (*DESCRIBED ON THE POST CONSTRUCTION STORMWATER MANAGEMENT PLAN*) PERFORMED BY THE HOMEOWNERS ASSOCIATION MUST BE REPORTED TO NEW HANOVER TOWNSHIP ON AN ANNUAL BASIS BY THE HOMEOWNERS ASSOCIATION.
THE REPORTING PERIOD FOR SUCH DATA SHALL BE FROM MARCH 10 TO MARCH 9 THE FOLLOWING YEAR. ALL REPORTS MUST BE SUBMITTED TO THE TOWNSHIP BY MARCH 15 OR THE FIEST BUSINESS DAY AFTER MARCH 15, WHICHEVER IS FIRST.

BMP: WET POND/ RETENTION BASIN

BMP: WET POND/ RETENTION BASIN

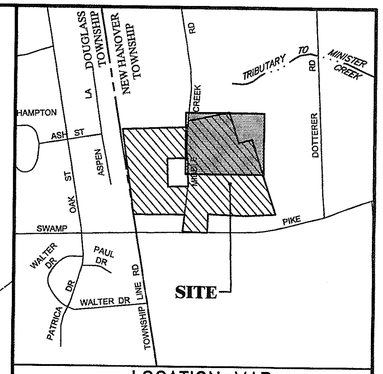

LOCATION MAP
SCALE: 1"= 800'

GENERAL MAINTENANCE:

THE FOLLOWING RECOMMENDATIONS ARE OFFERED FOR MONITORING AND MAINTENANCE OF BASIN GRASS AREAS:

MONITORING AND CONTROLLING GRASSY WEEDS OR PERSISTENT PERENNIALS IS ESSENTIAL IN THE FIRST AND SECOND YEARS. BURNING (BY EXPERIENCING PROFESSIONALS) ABOUT EVERY THREE YEARS IN EARLY SPRING CAN PREVENT SHRUB INVASION.

FIRST YEAR MAINTENANCE:

WHEN UNDESIRABLE WEED VEGETATION REACHES 12"–18" TALL, MOW TO NO LESS THAN 6" (WITH A MOWER AND/OR WEED EATER) TO PREVENT THE WEEDS FROM DEVELOPING SEED. THIS ALLOWS SUNLIGHT TO REACH DESIRED SPECIES.

SECOND YEAR MAINTENANCE:

MOW ONCE, CLOSE TO THE GROUND, IN EARLY SPRING. THIS WILL ENCOURAGE YOUNG NATIVE PLANTS TO EMERGE AND RAPID WARMING OF THE SOIL.

THE FOLLOWING RECOMMENDATIONS ARE OFFERED FOR MONITORING AND MAINTENANCE OF TURF GRASS AREAS:

BEGIN MAINTENANCE IMMEDIATELY AFTER EACH AREA IS PLANTED AND CONTINUE UNTIL ACCEPTABLE LAWN IS ESTABLISHED, BUT NOT FOR LESS THAN 60 DAYS FROM DATE OF SUBSTANTIAL COMPLETION.

MAINTAIN AND ESTABLISH LAWN BY WATERING, FERTILIZING, WEEDING, MOWING, TRIMMING, REPLANTING, AND OTHER OPERATIONS. ROLL, REGRADE,AND REPLANT BARE OR ERODED AREAS AND RE-MULCH TO PRODUCE A UNIFORMLY SMOOTH LAWN. (IN AREAS WHERE MULCH HAS BEEN DISTURBED BY WIND OR MAINTENANCE OPERATIONS, ADD NEW MULCH. ANCHOR AS REQUIRED TO PREVENT DISPLACEMENT.

WATERING: PROVIDE AND MAINTAIN TEMPORARY PIPING, HOSES, AND LAWN WATERING EQUIPMENT TO CONVEY WATER FROM SOURCES AND TO KEEP LAWN UNIFORMLY MOIST TO A DEPTH OF 4 INCHES. SCHEDULE WATERING TO PREVENT WILTING, PUDDLING, EROSION, AND DISPLACEMENT OF SEED OR MULCH. LAY OUT TEMPORARY WATERING SYSTEM TO AVOID WALKING OVER MUDDY OR NEWLY PLANTED AREAS. WATER LAWN AT A MINIMUM RATE OF 1 INCH PER WEEK.

MOW LAWN AS SOON AS TOP GROWTH IS TALL ENOUGH TO CUT. REPEAT MOWING TO MAINTAIN SPECIFIED HEIGHT WITHOUT CUTTING MORE THAN 40 PERCENT OF GRASS HEIGHT. REMOVE NO MORE THAN 40 PERCENT OF GRASS–LEAF GROWTH IN INITIAL OR SUBSEQUENT MOWINGS. DO NOT DELAY MOWING UNTIL GRASS BLADES BEND OVER AND BECOME MATTED. DO NOT MOW WHEN GRASS IS WET. SCHEDULE INITIAL AND SUBSEQUENT MOWINGS TO MAINTAIN THE GRASS AT 2 TO 3 INCHES HIGH.

LAWN POST–FERTILIZATION: APPLY FERTILIZER AFTER INITIAL MOWING AND WHEN GRASS IS DRY.

LEGEND

SYMBOL	DESCRIPTION
o	EXISTING IRON PIN (UNLESS OTHERWISE NOTED)
	EXISTING GRADE
	PROPOSED GRADE
	EXISTING STORM SEWER
	PROPOSED STORM SEWER
	EXISTING SANITARY SEWER
	PROPOSED SANITARY SEWER
W W	EXISTING WATER LINE
E E	EXISTING ELECTRIC LINE
OE OE	EXISTING OVERHEAD ELECTRIC LINE
G G	EXISTING GAS LINE
T T	EXISTING TELEPHONE LINE
W W	PROPOSED WATER SERVICE
WL WL	PROPOSED WATER SERVICE LATERAL
L L	EXISTING SANITARY SEWER LATERAL
L L	PROPSED SANITARY SEWER LATERAL

"FINAL"

30 0 30 60 90
GRAPHIC SCALE

NO.	DATE	DESCRIPTION	BY
9	1/9/17	REVISED PHASE "D"	JAS
8	11/9/15	REVISED PHASE "B"	JAS
7	8/12/14	REV MIDDLE CREEK ROAD	RMC
6	12/20/13	REV. PER NPDES RENEWAL	RMC
5	9/6/13	REV. PER TWP. ENG. COMMENTS	RMC
4	8/23/13	REV. PER TWP. ENG. LETTER DATED 7/31/13	JAS
3	6/24/13	REV. PER TWP. ENG. LETTERS DATED 1/3/13, 2/7/13	JAS
2	5/6/13	REV. AS PER NPDES MINOR REVISION	JAS
1	11/30/12	REV. AS PER TWP. ENG. LETTER DATED 6/6/12	JAS

RENNINGER PROPERTY SUBDIVISION
POST CONSTRUCTION STORMWATER MANAGEMENT PLAN (2 of 5)

PREPARED FOR
GAMBONE SWAMP PIKE, L.P.
NEW HANOVER TOWNSHIP
MONTGOMERY COUNTY
PENNSYLVANIA

Chambers Associates, Inc.
Consulting Engineers and Surveyors
2962 Skippack Pike P.O. Box 678
Worcester, PA 19490–0678
484–991–8187

SCALE	DATE	JOB	DRAWING NO.
1"=30'	4–27–12	485–084	SHEET 26 of 54
MANAGER: JPH			DRAWN BY: JAS

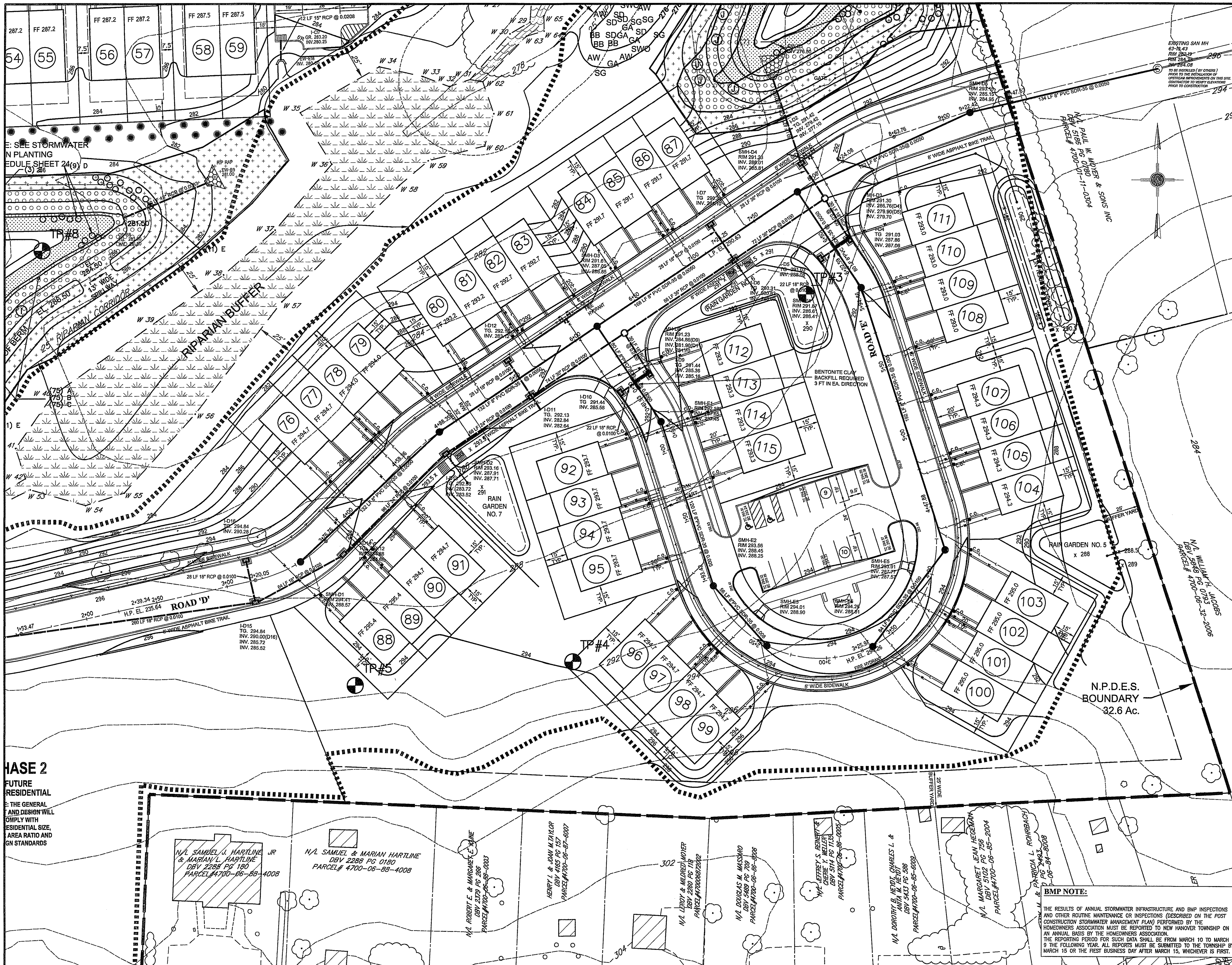

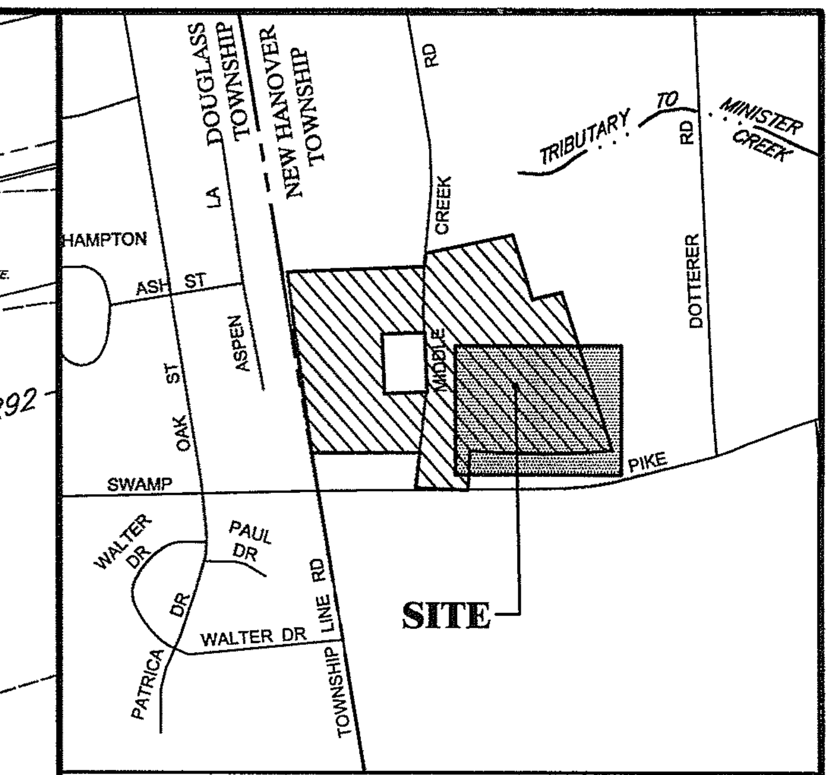

LOCATION MAP
SCALE: 1"= 800'

GENERAL MAINTENANCE:

THE FOLLOWING RECOMMENDATIONS ARE OFFERED FOR MONITORING AND MAINTENANCE OF BASIN GRASS AREAS:

MONITORING AND CONTROLLING GRASSY WEEDS OR PERSISTENT PERENNIALS IS ESSENTIAL IN THE FIRST AND SECOND YEARS. BURNING (BY EXPERIENCING PROFESSIONALS) ABOUT EVERY THREE YEARS IN EARLY SPRING CAN PREVENT SHRUB INVASION.

FIRST YEAR MAINTENANCE:

WHEN UNDESIRABLE WEED VEGETATION REACHES 12"–18" TALL, MOW TO NO LESS THAN 6" (WITH A MOWER AND/OR WEED EATER) TO PREVENT THE WEEDS FROM DEVELOPING SEED. THIS ALLOWS SUNLIGHT TO REACH DESIRED SPECIES.

SECOND YEAR MAINTENANCE:

MOW ONCE, CLOSE TO THE GROUND, IN EARLY SPRING. THIS WILL ENCOURAGE YOUNG NATIVE PLANTS TO EMERGE AND RAPID WARMING OF THE SOIL.

THE FOLLOWING RECOMMENDATIONS ARE OFFERED FOR MONITORING AND MAINTENANCE OF TURF GRASS AREAS:

BEGIN MAINTENANCE IMMEDIATELY AFTER EACH AREA IS PLANTED AND CONTINUE UNTIL ACCEPTABLE LAWN IS ESTABLISHED, BUT NOT FOR LESS THAN 60 DAYS FROM DATE OF SUBSTANTIAL COMPLETION.

MAINTAIN AND ESTABLISH LAWN BY WATERING, FERTILIZING, WEEDING, MOWING, TRIMMING, REPLANTING, AND OTHER OPERATIONS. ROLL, REGRADE,AND REPLANT BARE OR ERODED AREAS AND RE-MULCH TO PRODUCE A UNIFORMLY SMOOTH LAWN. (IN AREAS WHERE MULCH HAS BEEN DISTURBED BY WIND OR MAINTENANCE OPERATIONS, ADD NEW MULCH. ANCHOR AS REQUIRED TO PREVENT DISPLACEMENT.

WATERING: PROVIDE AND MAINTAIN TEMPORARY PIPING, HOSES, AND LAWN WATERING EQUIPMENT TO CONVEY WATER FROM SOURCES AND TO KEEP LAWN UNIFORMLY MOIST TO A DEPTH OF 4 INCHES. SCHEDULE WATERING TO PREVENT WILTING, PUDDLING, EROSION, AND DISPLACEMENT OF SEED OR MULCH. LAY OUT TEMPORARY WATERING SYSTEM TO AVOID WALKING OVER MUDDY OR NEWLY PLANTED AREAS. WATER LAWN AT A MINIMUM RATE OF 1 INCH PER WEEK.

MOW LAWN AS SOON AS TOP GROWTH IS TALL ENOUGH TO CUT. REPEAT MOWING TO MAINTAIN SPECIFIED HEIGHT WITHOUT CUTTING MORE THAN 40 PERCENT OF GRASS HEIGHT. REMOVE NO MORE THAN 40 PERCENT OF GRASS-LEAF GROWTH IN INITIAL OR SUBSEQUENT MOWINGS. DO NOT DELAY MOWING UNTIL GRASS BLADES BEND OVER AND BECOME MATTED. DO NOT MOW WHEN GRASS IS WET. SCHEDULE INITIAL AND SUBSEQUENT MOWINGS TO MAINTAIN THE GRASS 2 TO 3 INCHES HIGH.

LAWN POST-FERTILIZATION: APPLY FERTILIZER AFTER INITIAL MOWING AND WHEN GRASS IS DRY.

LEGEND

SYMBOL	DESCRIPTION
○	EXISTING IRON PIN (UNLESS OTHERWISE NOTED)
— — — —	EXISTING GRADE
———	PROPOSED GRADE
==▭==	EXISTING STORM SEWER
—▥—	PROPOSED STORM SEWER
==◉==	EXISTING SANITARY SEWER
—●—	PROPOSED SANITARY SEWER
—W—W—	EXISTING WATER LINE
—E—E—	EXISTING ELECTRIC LINE
—OE—OE—	EXISTING OVERHEAD ELECTRIC LINE
—G—G—	EXISTING GAS LINE
—T—T—	EXISTING TELEPHONE LINE
—W—W—	PROPOSED WATER SERVICE
—WL—WL—	PROPOSED WATER SERVICE LATERAL
—L—L—	EXISTING SANITARY SEWER LATERAL
—L—L—	PROPSED SANITARY SEWER LATERAL

"FINAL"

GRAPHIC SCALE: 30 0 30 60 90

NO.	DATE	DESCRIPTION	BY
9	1/9/17	REVISED PHASE "D"	JAS
8	11/9/15	REVISED PHASE "B"	JAS
7	8/12/14	REV MIDDLE CREEK ROAD	RMC
6	12/20/13	REV. PER NPDES RENEWAL	RMC
5	9/6/13	REV. PER TWP. ENG. COMMENTS	RMC
4	8/23/13	REV. PER TWP. ENG. LETTER DATED 7/31/13	JAS
3	6/24/13	REV. PER TWP. ENG. LETTERS DATED 1/3/13, 2/7/13	JAS
2	5/6/13	REV. AS PER NPDES MINOR REVISION	JAS
1	11/30/12	REV. AS PER TWP. ENG. LETTER DATED 6/6/12	JAS

RENNINGER PROPERTY SUBDIVISION
POST CONSTRUCTION STORMWATER MANAGEMENT PLAN (3 of 5)

PREPARED FOR
GAMBONE SWAMP PIKE, L.P.
NEW HANOVER TOWNSHIP
MONTGOMERY COUNTY
PENNSYLVANIA

Chambers Associates, Inc.
Consulting Engineers and Surveyors
2962 Skippack Pike P.O. Box 678
Worcester, PA 19490-0678
484-991-8187

SCALE	DATE	JOB	DRAWING NO.
1"=30'	4-27-12	485-084	SHEET 27 of 54
MANAGER: JPH		DRAWN BY: JAS	

BMP NOTE:

THE RESULTS OF ANNUAL STORMWATER INFRASTRUCTURE AND BMP INSPECTIONS AND OTHER ROUTINE MAINTENANCE OR INSPECTIONS *(DESCRIBED ON THE POST CONSTRUCTION STORMWATER MANAGEMENT PLAN)* PERFORMED BY THE HOMEOWNERS ASSOCIATION MUST BE REPORTED TO NEW HANOVER TOWNSHIP ON AN ANNUAL BASIS BY THE HOMEOWNERS ASSOCIATION.
THE REPORTING PERIOD FOR SUCH DATA SHALL BE FROM MARCH 10 TO MARCH 9 THE FOLLOWING YEAR. ALL REPORTS MUST BE SUBMITTED TO THE TOWNSHIP BY MARCH 15 OR THE FIEST BUSINESS DAY AFTER MARCH 15, WHICHEVER IS FIRST.

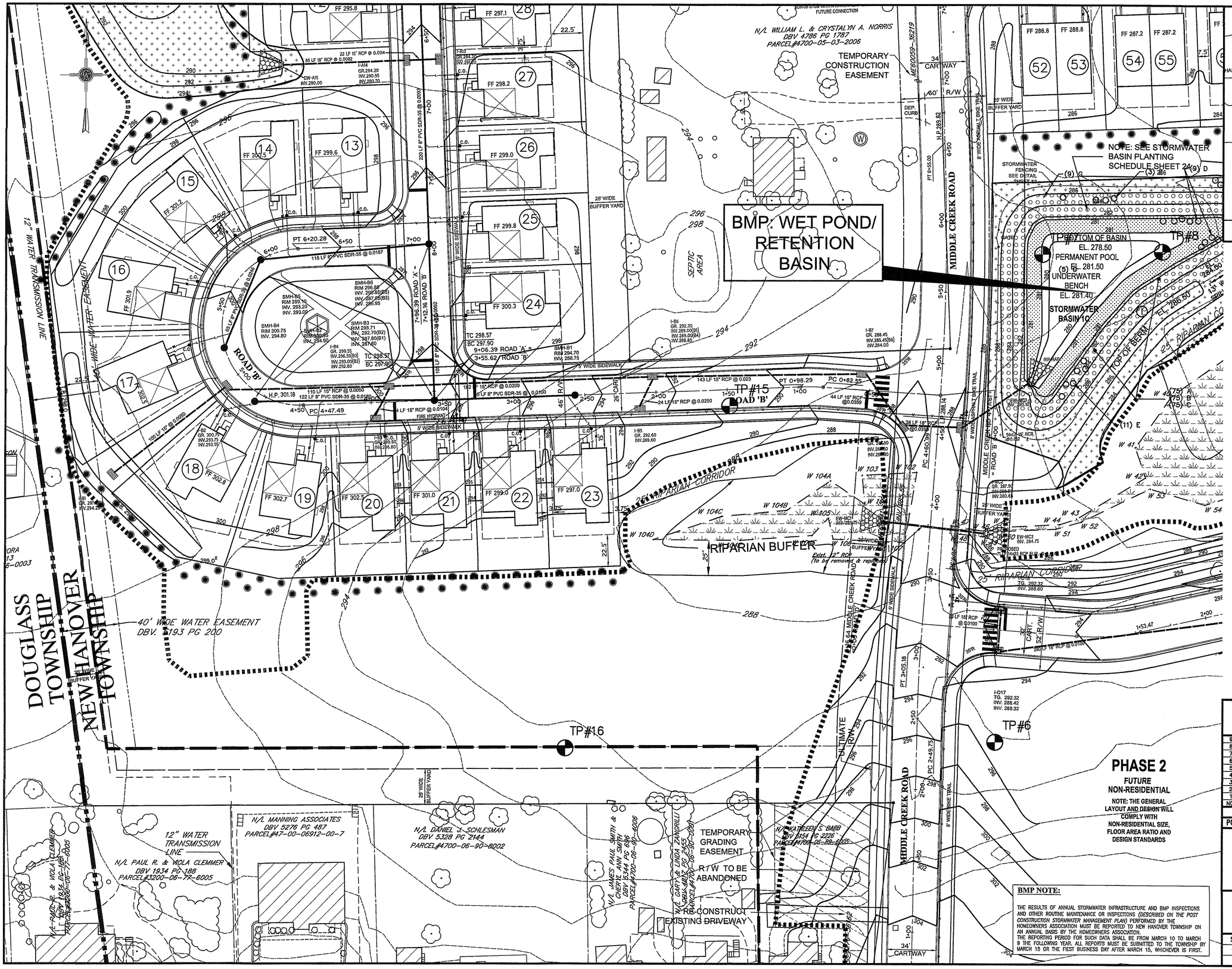

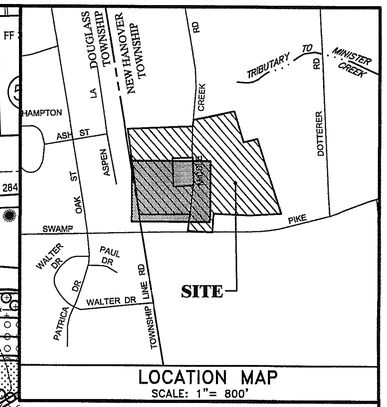

LOCATION MAP
SCALE: 1"= 800'

GENERAL MAINTENANCE:

THE FOLLOWING RECOMMENDATIONS ARE OFFERED FOR MONITORING AND MAINTENANCE OF BASIN GRASS AREAS:

MONITORING AND CONTROLLING GRASSY WEEDS OR PERSISTENT PERENNIALS IS ESSENTIAL IN THE FIRST AND SECOND YEARS. BURNING (BY EXPERIENCING PROFESSIONALS) ABOUT EVERY THREE YEARS IN EARLY SPRING CAN PREVENT SHRUB INVASION.

FIRST YEAR MAINTENANCE:

WHEN UNDESIRABLE WEED VEGETATION REACHES 12"-18" TALL, MOW TO NO LESS THAN 6" (WITH A MOWER AND/OR WEED EATER) TO PREVENT THE WEEDS FROM DEVELOPING SEED. THIS ALLOWS SUNLIGHT TO REACH DESIRED SPECIES.

SECOND YEAR MAINTENANCE:

MOW ONCE, CLOSE TO THE GROUND, IN EARLY SPRING. THIS WILL ENCOURAGE YOUNG NATIVE PLANTS TO EMERGE AND RAPID WARMING OF THE SOIL.

THE FOLLOWING RECOMMENDATIONS ARE OFFERED FOR MONITORING AND MAINTENANCE OF TURF GRASS AREAS:

BEGIN MAINTENANCE IMMEDIATELY AFTER EACH AREA IS PLANTED AND CONTINUE UNTIL ACCEPTABLE LAWN IS ESTABLISHED, BUT NOT FOR LESS THAN 60 DAYS FROM DATE OF SUBSTANTIAL COMPLETION.

MAINTAIN AND ESTABLISH LAWN BY WATERING, FERTILIZING, WEEDING, MOWING, TRIMMING, REPLANTING, AND OTHER OPERATIONS. ROLL, REGRADE,AND REPLANT BARE OR ERODED AREAS AND RE-MULCH TO PRODUCE A UNIFORMLY SMOOTH LAWN. (IN AREAS WHERE MULCH HAS BEEN DISTURBED BY WIND OR MAINTENANCE OPERATIONS, ADD NEW MULCH. ANCHOR AS REQUIRED TO PREVENT DISPLACEMENT.

WATERING: PROVIDE AND MAINTAIN TEMPORARY PIPING, HOSES, AND LAWN WATERING EQUIPMENT TO CONVEY WATER FROM SOURCES AND TO KEEP LAWN UNIFORMLY MOIST TO A DEPTH OF 4 INCHES. SCHEDULE WATERING TO PREVENT WILTING, PUDDLING, EROSION, AND DISPLACEMENT OF SEED OR MULCH. LAY OUT TENPORARY WATERING SYSTEM TO AVOID WALKING OVER MUDDY OR NEWLY PLANTED AREAS. WATER LAWN AT A MINIMUM RATE OF 1 INCH PER WEEK.

MOW LAWN AS SOON AS TOP GROWTH IS TALL ENOUGH TO CUT. REPEAT MOWING TO MAINTAIN SPECIFIED HEIGHT WITHOUT CUTTING MORE THAN 40 PERCENT OF GRASS HEIGHT. REMOVE NO MORE THAN 40 PERCENT OF GRASS--LEAF GROWTH IN INITIAL OR SUBSEQUENT MOWINGS. DO NOT DELAY MOWING UNTIL GRASS BLADES BEND OVER AND BECOME MATTED. DO NOT MOW WHEN GRASS IS WET. SCHEDULE INITIAL AND SUBSEQUENT MOWINGS TO MAINTAIN THE GRASS 2 TO 3 INCHES HIGH.

LAWN POST-FERTILIZATION: APPLY FERTILIZER AFTER INITIAL MOWING AND WHEN GRASS IS DRY.

LEGEND

SYMBOL	DESCRIPTION
○	EXISTING IRON PIN (UNLESS OTHERWISE NOTED)
	EXISTING GRADE
	PROPOSED GRADE
	EXISTING STORM SEWER
	PROPOSED STORM SEWER
	EXISTING SANITARY SEWER
	PROPOSED SANITARY SEWER
W W	EXISTING WATER LINE
E E	EXISTING ELECTRIC LINE
OE OE	EXISTING OVERHEAD ELECTRIC LINE
G G	EXISTING GAS LINE
T T	EXISTING TELEPHONE LINE
W W	PROPOSED WATER SERVICE
WL WL	PROPOSED WATER SERVICE LATERAL
L L	EXISTING SANITARY SEWER LATERAL
L L	PROPSED SANITARY SEWER LATERAL

"FINAL"

GRAPHIC SCALE 30 0 30 60 90

NO.	DATE	DESCRIPTION	BY
9	1/9/17	REVISED PHASE "D"	JAS
8	11/3/15	REVISED PHASE "D"	JAS
7	8/12/14	REV MIDDLE CREEK ROAD	RMC
6	12/20/13	REV. PER NPDES RENEWAL	RMC
5	9/6/13	REV. PER TWP. ENG. COMMENTS	RMC
4	8/23/13	REV. PER TWP. ENG. LETTER DATED 7/31/13	JAS
3	6/24/13	REV. PER TWP. ENG. LETTERS DATED 1/3/13, 2/7/13	JAS
2	5/6/13	REV. AS PER NPDES MINOR REVISION	JAS
1	11/30/12	REV. AS PER TWP. ENG. LETTER DATED 6/6/12	JAS

RENNINGER PROPERTY SUBDIVISION

POST CONSTRUCTION STORMWATER MANAGEMENT PLAN (4 of 5)

PREPARED FOR
GAMBONE SWAMP PIKE, L.P.
NEW HANOVER TOWNSHIP
MONTGOMERY COUNTY
PENNSYLVANIA

Chambers Associates, Inc.
Consulting Engineers and Surveyors
2962 Skippack Pike P.O. Box 678
Worcester, PA 19490-0678
484-991-8187

SCALE	DATE	JOB	DRAWING NO.
1"=30'	4-27-12	485-084	SHEET 28 of 54
MANAGER: JPH		DRAWN BY: JAS	

L:\PROJECTS\485-084\RENNINGER\SUBDIVISION\SET OF PLANS 3-14-2013\485-084-PCSMP-PLAN-4.dwg, JAS, 1/9/2017 11:52:28 AM, 3222H HP DESIGNJET 815

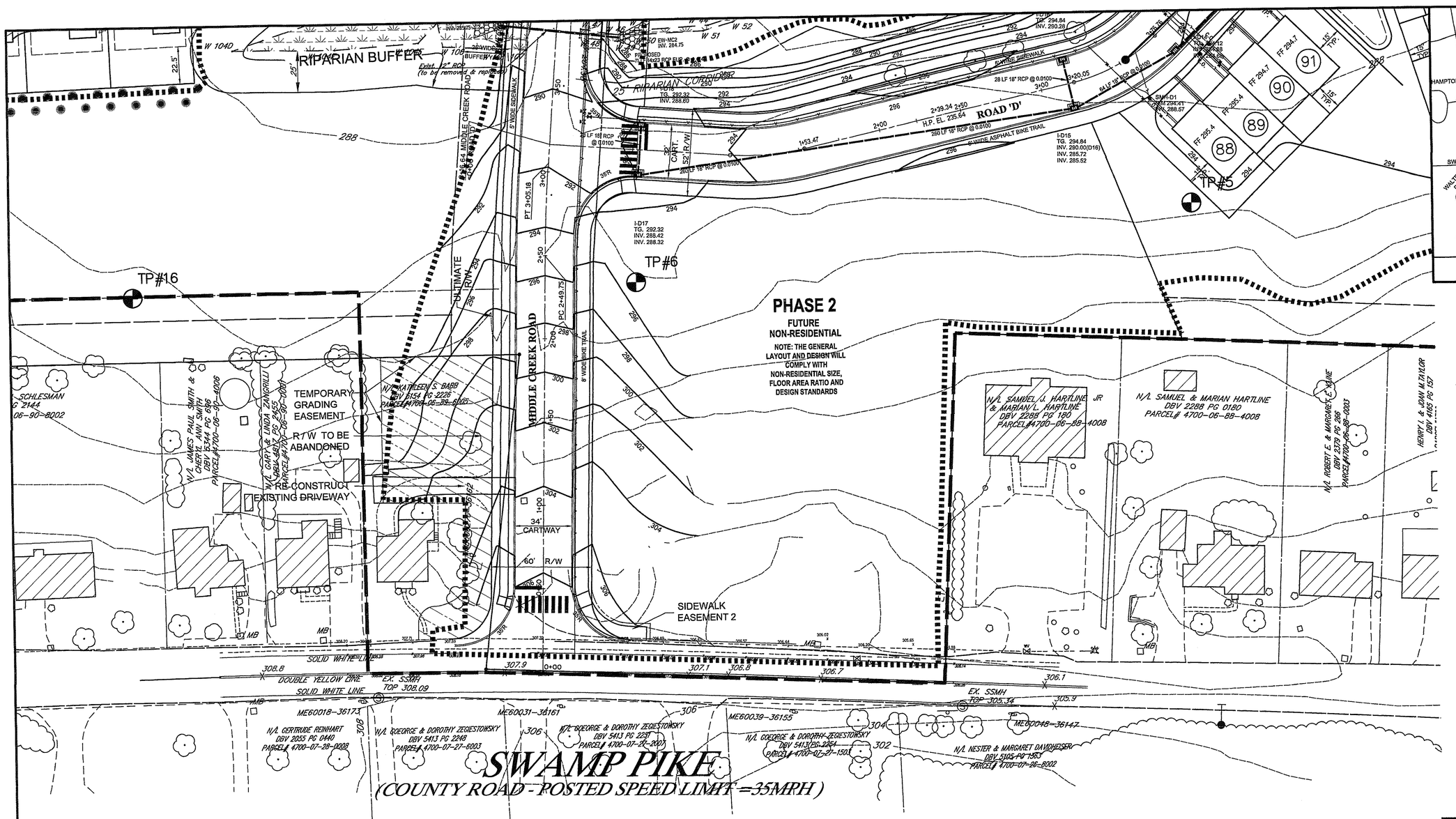

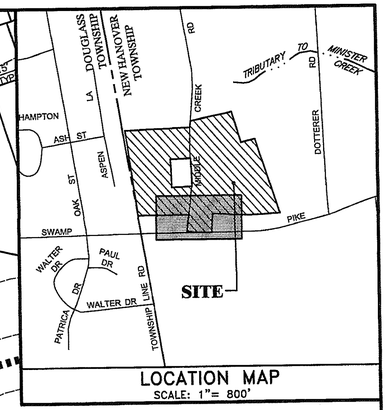

LEGEND

SYMBOL	DESCRIPTION
○	EXISTING IRON PIN (UNLESS OTHERWISE NOTED)
	EXISTING GRADE
	PROPOSED GRADE
	EXISTING STORM SEWER
	PROPOSED STORM SEWER
	EXISTING SANITARY SEWER
	PROPOSED SANITARY SEWER
W—W	EXISTING WATER LINE
E—E	EXISTING ELECTRIC LINE
OE—OE	EXISTING OVERHEAD ELECTRIC LINE
G—G	EXISTING GAS LINE
T—T	EXISTING TELEPHONE LINE
W—W	PROPOSED WATER SERVICE
WL—WL	PROPOSED WATER SERVICE LATERAL
L—L	EXISTING SANITARY SEWER LATERAL
L—L	PROPSED SANITARY SEWER LATERAL

"FINAL"

GRAPHIC SCALE 30 0 30 60 90

NO.	DATE	DESCRIPTION	BY
9	1/9/17	REVISED PHASE "B"	JAS
8	11/9/15	REVISED PHASE "B"	JAS
7	8/12/14	REV MIDDLE CREEK ROAD	RMC
6	12/20/13	REV. PER NPDES RENEWAL	RMC
5	9/6/13	REV. PER TWP. ENG. COMMENTS	RMC
4	8/23/13	REV. PER. TWP. ENG. LETTER DATED 7/31/13	JAS
3	6/24/13	REV. PER TWP. ENG. LETTERS DATED 1/3/13, 2/7/13	JAS
2	5/6/13	REV. AS PER NPDES MINOR REVISION	JAS
1	11/30/12	REV. AS PER TWP. ENG. LETTER DATED 6/6/12	JAS

RENNINGER PROPERTY SUBDIVISION

POST CONSTRUCTION STORMWATER MANAGEMENT PLAN (5 of 5)

PREPARED FOR

GAMBONE SWAMP PIKE, L.P.

NEW HANOVER TOWNSHIP

MONTGOMERY COUNTY

PENNSYLVANIA

Chambers Associates, Inc.
Consulting Engineers and Surveyors
2962 Skippack Pike P.O. Box 678
Worcester, PA 19490-0678
484-991-8187

SCALE	DATE	JOB	DRAWING NO.
1"=30'	4-27-12	485-084	SHEET 29 of 54
MANAGER: JPH		DRAWN BY: JAS	

GENERAL MAINTENANCE:

THE FOLLOWING RECOMMENDATIONS ARE OFFERED FOR MONITORING AND MAINTENANCE OF BASIN GRASS AREAS:

MONITORING AND CONTROLLING GRASSY WEEDS OR PERSISTENT PERENNIALS IS ESSENTIAL IN THE FIRST AND SECOND YEARS. BURNING (BY EXPERIENCING PROFESSIONALS) ABOUT EVERY THREE YEARS IN EARLY SPRING CAN PREVENT SHRUB INVASION.

FIRST YEAR MAINTENANCE:

WHEN UNDESIRABLE WEED VEGETATION REACHES 12"-18" TALL, MOW TO NO LESS THAN 6" (WITH A MOWER AND/OR WEED EATER) TO PREVENT THE WEEDS FROM DEVELOPING SEED. THIS ALLOWS SUNLIGHT TO REACH DESIRED SPECIES.

SECOND YEAR MAINTENANCE:

MOW ONCE, CLOSE TO THE GROUND, IN EARLY SPRING. THIS WILL ENCOURAGE YOUNG NATIVE PLANTS TO EMERGE AND RAPID WARMING OF THE SOIL.

THE FOLLOWING RECOMMENDATIONS ARE OFFERED FOR MONITORING AND MAINTENANCE OF TURF GRASS AREAS:

BEGIN MAINTENANCE IMMEDIATELY AFTER EACH AREA IS PLANTED AND CONTINUE UNTIL ACCEPTABLE LAWN IS ESTABLISHED, BUT NOT FOR LESS THAN 60 DAYS FROM DATE OF SUBSTANTIAL COMPLETION.

MAINTAIN AND ESTABLISH LAWN BY WATERING, FERTILIZING, WEEDING, MOWING, TRIMMING, REPLANTING, AND OTHER OPERATIONS. ROLL, REGRADE,AND REPLANT BARE OR ERODED AREAS AND RE-MULCH TO PRODUCE A UNIFORMLY SMOOTH LAWN. ON AREAS WHERE MULCH HAS BEEN DISTURBED BY WIND OR MAINTENANCE OPERATIONS, ADD NEW MULCH. ANCHOR AS REQUIRED TO PREVENT DISPLACEMENT.

WATERING: PROVIDE AND MAINTAIN TEMPORARY PIPING, HOSES, AND LAWN WATERING EQUIPMENT TO CONVEY WATER FROM SOURCES AND TO KEEP LAWN UNIFORMLY MOIST TO A DEPTH OF 4 INCHES. SCHEDULE WATERING TO PREVENT WILTING, PUDDLING, EROSION, AND DISPLACEMENT OF SEED OR MULCH. LAY OUT TEMPORARY WATERING SYSTEM TO AVOID WALKING OVER MUDDY OR NEWLY PLANTED AREAS. WATER LAWN AT A MINIMUM RATE OF 1 INCH PER WEEK.

MOW LAWN AS SOON AS TOP GROWTH IS TALL ENOUGH TO CUT. REPEAT MOWING TO MAINTAIN SPECIFIED HEIGHT WITHOUT CUTTING MORE THAN 40 PERCENT OF GRASS HEIGHT. REMOVE NO MORE THAN 40 PERCENT OF GRASS-LEAF GROWTH IN INITIAL OR SUBSEQUENT MOWINGS. DO NOT DELAY MOWING UNTIL GRASS BLADES BEND OVER AND BECOME MATTED. DO NOT MOW WHEN GRASS IS WET. SCHEDULE INITIAL AND SUBSEQUENT MOWINGS TO MAINTAIN THE GRASS 2 TO 3 INCHES HIGH.

LAWN POST-FERTILIZATION: APPLY FERTILIZER AFTER INITIAL MOWING AND WHEN GRASS IS DRY.

BMP NOTE:

THE RESULTS OF ANNUAL STORMWATER INFRASTRUCTURE AND BMP INSPECTIONS AND OTHER ROUTINE MAINTENANCE OR INSPECTIONS (DESCRIBED ON THE POST CONSTRUCTION STORMWATER MANAGEMENT PLAN) PERFORMED BY THE HOMEOWNERS ASSOCIATION MUST BE REPORTED TO NEW HANOVER TOWNSHIP ON AN ANNUAL BASIS BY THE HOMEOWNERS ASSOCIATION. THE REPORTING PERIOD FOR SUCH DATA SHALL BE FROM MARCH 10 TO MARCH 9 THE FOLLOWING YEAR. ALL REPORTS MUST BE SUBMITTED TO THE TOWNSHIP BY MARCH 15 OR THE FIEST BUSINESS DAY AFTER MARCH 15, WHICHEVER IS FIRST.

L:\Projects\485\84-SWAMP PIKE\Drawings\Post Construction\485-084 PCSM 1-4-17-(27-24)-Phase 2.dwg, 1/11/2017 11:52:11 AM, BRIAN HAMPTON, 1:1

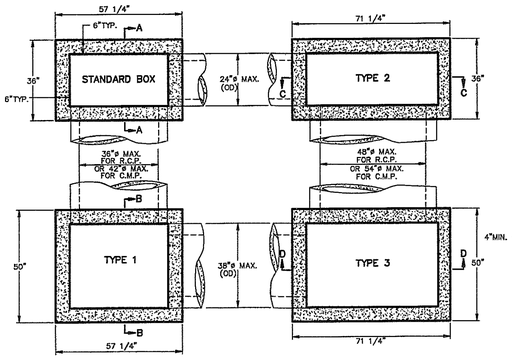

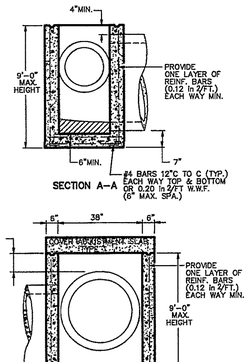

SECTION A–A

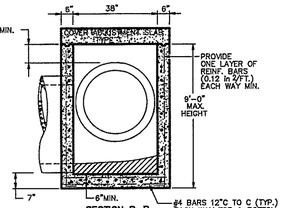

SECTION B–B

USE ONE-PIECE PRE-CAST CONCRETE ADJUSTMENT RINGS FOR ANY REQUIRED ADJUSTMENTS.

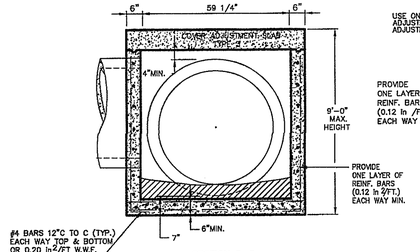

SECTION D–D
TYPE 3 ONLY

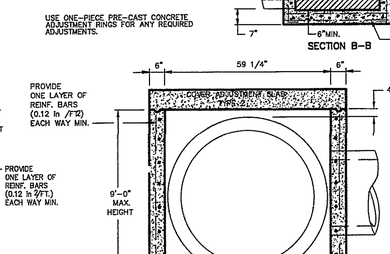

SECTION C–C

NOTE:
1. INSTALL LADDER RUNGS IN ALL INLETS GREATER THAN 4 FEET DEEP.
2. CONCRETE FLOW CHANNELS SHALL BE CONSTRUCTED IN ALL INLET BOTTOMS.
   PIPE SHALL BE CLASS III RCP OR BETTER WITH RUBBER GASKETS.
   LIFT HOLES SHALL BE PLUGGED WITH PRE CAST CONCRETE PLUGS ONLY.
   SEAL ALL ANNULAR SPACES BETWEEN PIPES AND INLETS WITH CONCRETE ONLY.
   CONCRETE WASH SHALL EXTEND UP THE SIDES OF INLETS 12" WHERE POSSIBLE.

NOTE:
1. CONSTRUCT INLET BOXES IN ACCORDANCE WITH THE REQUIREMENTS OF PADOT PUB. 408, SECTION 714.
2. INLETS THAT EXCEED 4 FT. IN DEPTH SHALL HAVE STEPS IN ACCORDANCE WITH RC-39.

PRECAST CONCRETE INLET BOXES

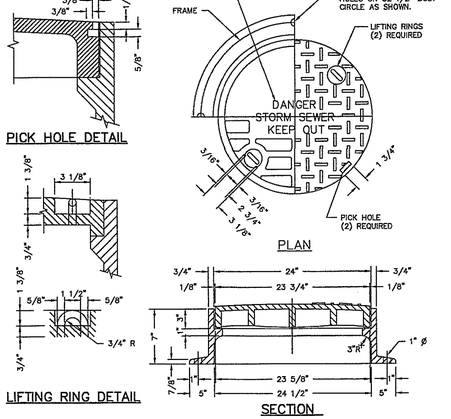

CAST IRON STORM MANHOLE FRAME AND COVER DETAIL
NOTE: MANHOLE FRAMES AND COVERS SHALL BE HS-25 LOADING APPROVED

PIPE DIA.	L	W	A
15–18"	4.0'	4.0'	12"
24"	4.3'	4.25'	12"
36"	5.5'	4.7'	12"
42"	6.0'	5.8'	12"
48"	6.5'	7.0'	12"
54"	7.0'	8.1'	12"
60"	7.5'	9.25'	12"
72"	8.5'	11.5'	12"

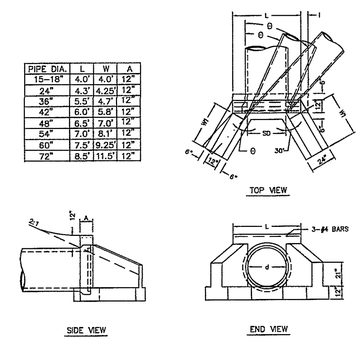

PROPOSED STORM TYPE D–W ENDWALL

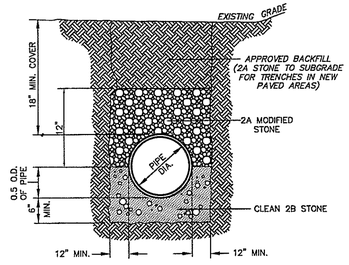

STORM SEWER TRENCH RESTORATION

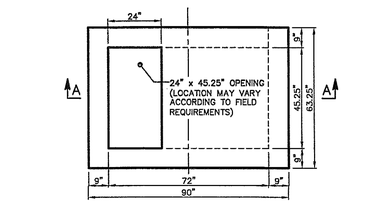

PLAN

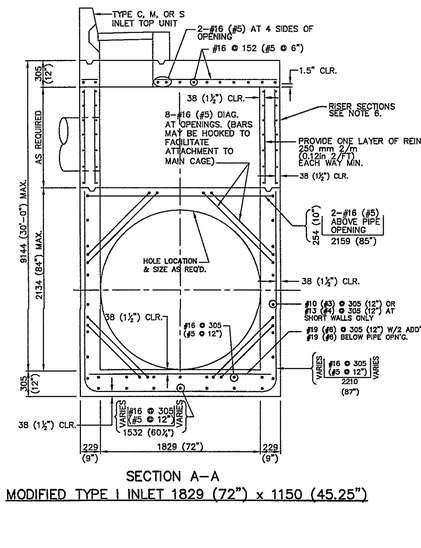

SECTION A–A
MODIFIED TYPE I INLET 1829 (72") x 1150 (45.25")

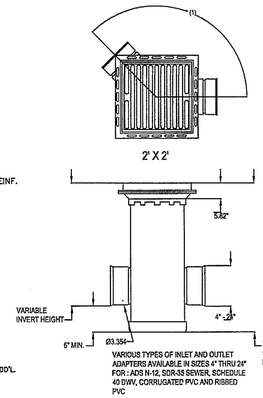

* (1) ADAPTERS CAN BE MOUNTED ON ANY ANGLE 0° TO 359° TO DETERMINE MINIMUM ANGLE BETWEEN ADAPTERS, SEE DRAWING NO. 7001-110-012 & 7001-110-013.
* (2) MAXIMUM RECOMMENDED OVERALL HEIGHT 10'.

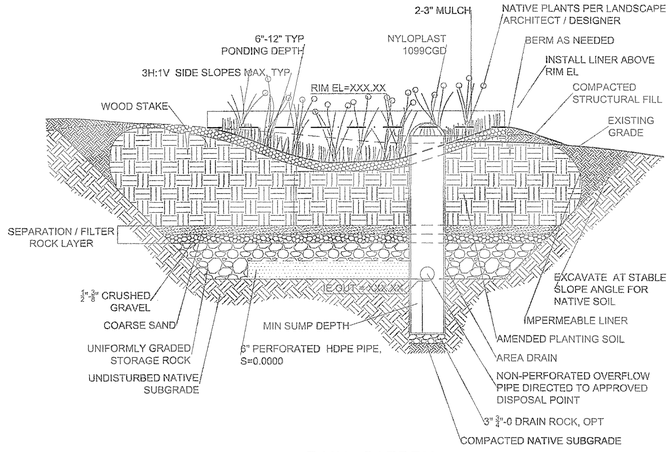

RAIN GARDEN
N.T.S.

"FINAL"

NO.	DATE	DESCRIPTION	BY
9	1/9/17	REVISED PHASE "D"	JAS
8	11/9/15	REVISED PHASE "B"	JAS
7	8/12/14	REV MIDDLE CREEK ROAD	RMC
6	12/20/13	REV. PER. NPDES RENEWAL	RMC
5	9/6/13	REV. PER. TWP. ENG. COMMENTS	RMC
4	8/23/13	REV. PER. TWP. ENG. LETTER DATED 7/31/13	JAS
3	6/24/13	REV. PER. TWP. ENG. LETTERS DATED 1/3/13, 2/7/13	JAS
2	5/6/13	REV. AS PER NPDES MINOR REVISION	JAS
1	11/30/12	REV. AS PER TWP. ENG. LETTER DATED 6/6/12	JAS

RENNINGER PROPERTY SUBDIVISION

POST CONSTRUCTION STORMWATER MANAGEMENT DETAILS

PREPARED FOR
GAMBONE SWAMP PIKE, L.P.
NEW HANOVER TOWNSHIP
MONTGOMERY COUNTY
PENNSYLVANIA

Chambers Associates, Inc.
Consulting Engineers and Surveyors
2962 Skippack Pike P.O. Box 678
Worcester, PA 19490–0678
484–991–8187

SCALE	DATE	JOB	DRAWING NO.
N.T.S.	4/27/12	485–084	SHEET 30 of 54
MANAGER: JPH		DRAWN BY: JAS	

L:\Projects\485084\19-Submission\SUBMISSION SET OF PLANS 1-9-17\7001110-Installed-Inlets-details.dwg, 7/6, 1/26/2017 11:33:37 AM, RICOH MP C4503PCL

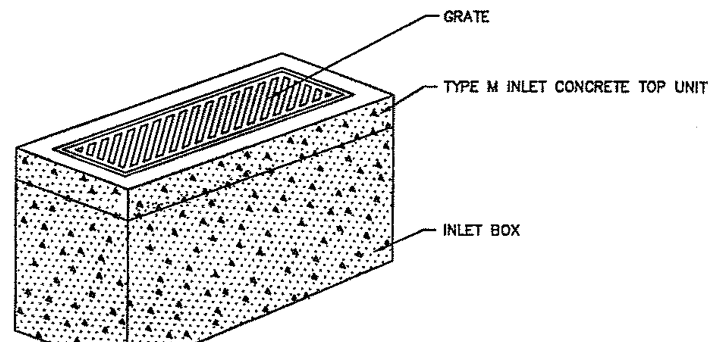

TYPE M INLET

NOTE:
1. ONLY PADOT BICYCLE SAFE GRATES ARE TO BE INSTALLED ON THE INLETS LOCATED IN PAVED AREAS AND PADOT CAST IRON GRATES ARE TO BE INSTALLED ON INLETS LOCATED IN LAWN AREAS.
2. "DRAINS TO CREEK" DECAL MUST BE PROVIDED ON INLETS.

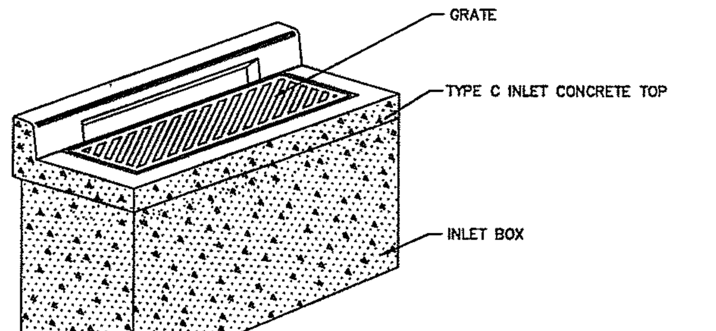

TYPE C INLET

NOTE:
1. TILT THE INLET BOXES OR CAST THE PROPER CAMBER INTO THE TOP TO MATCH THE ROAD GRADE.
2. "DRAINS TO CREEK" DECAL MUST BE PROVIDED ON INLETS.

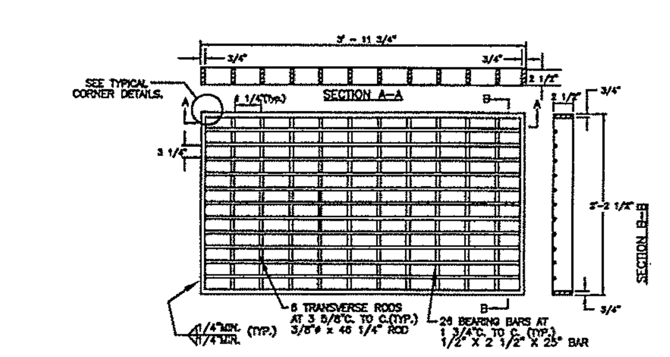

STRUCTURAL STEEL GRATE BICYCLE SAFE

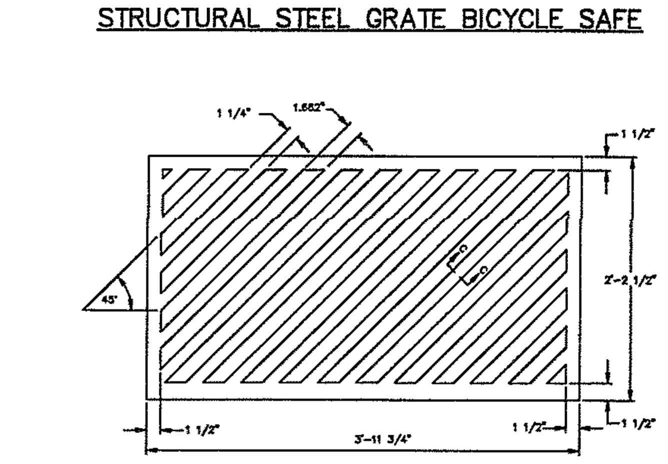

CAST IRON GRATE

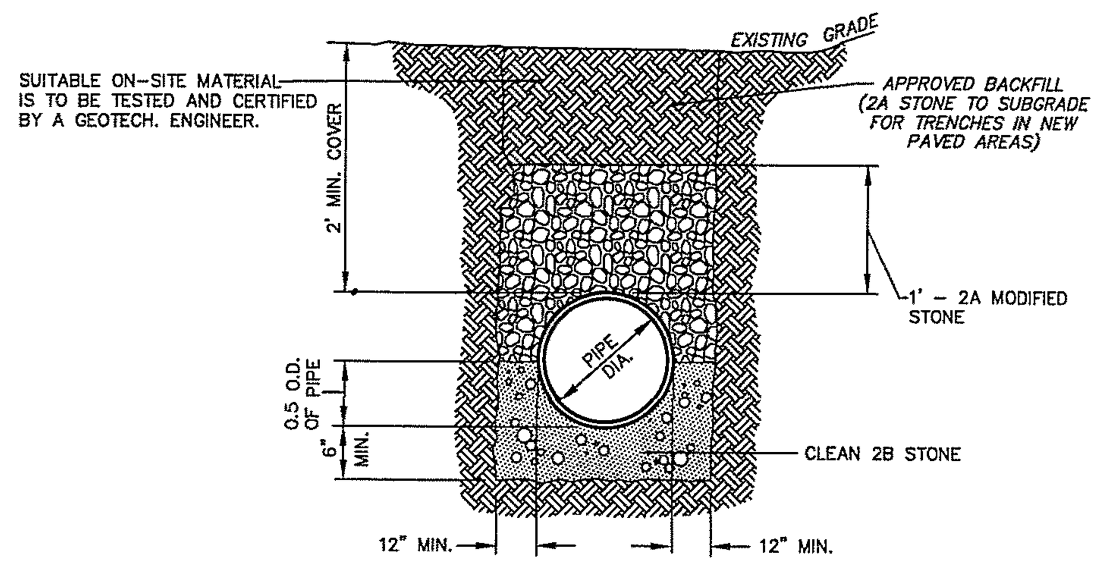

NOTE: 1. PIPE SHALL BE CLASS III RCP OR BETTER WITH RUBBER GASKETS.
2. LIFT HOLES SHALL BE PLUGGED WITH PRE CAST CONCRETE PLUGS ONLY.

STORM SEWER & UTILITY TRENCH
NOT FOR SANITARY SEWERS

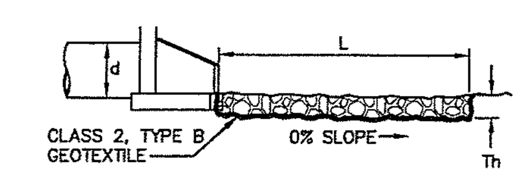

ELEVATION VIEW

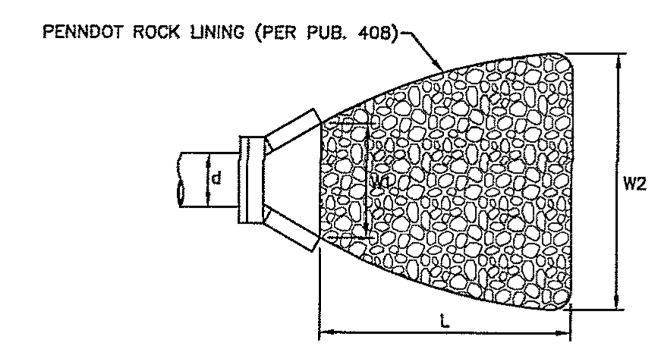

PLAN VIEW

ENDWALL	PIPE DIA. (d) (in)	APRON LENGTH (L) (ft)	APRON WIDTH (W1) (ft)	APRON WIDTH (W2) (ft)	APRON THICKNESS (Th) (in)	RIPRAP SIZE
MC-10	36	20	9	29	24	R-5
C-20	18	8	4.5	12.5	18	R-4
D-1	42	22	10.5	32.5	24	R-5
D-20	18	8	4.5	12.5	18	R-4
MC-3	36	20	9	29	24	R-5
B-9	18	8	4.5	12.5	18	R-4
A-11	18	8	4.5	12.5	18	R-4
MC-1	14x23	12	6	18	18	R-4
MC-2	14x23	12	6	18	18	R-4

RIP RAP APRON DETAIL

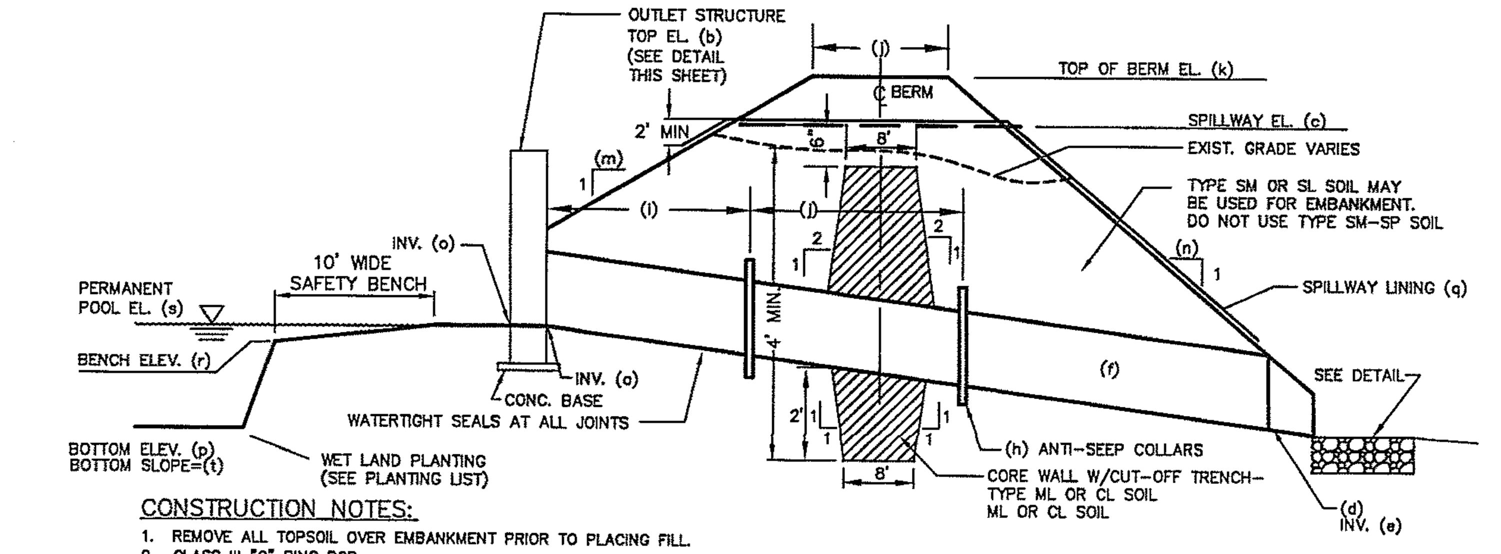

CONSTRUCTION NOTES:
1. REMOVE ALL TOPSOIL OVER EMBANKMENT PRIOR TO PLACING FILL.
2. CLASS III "O" RING RCP.
3. PLACE FILL IN 8" LIFTS COMPACT TO 95% MAXIMUM DRY DENSITY PER ASTM–D1557.
4. FURNISH & PLACE 4" MINIMUM TOPSOIL, SOIL SUPPLEMENTS, FORMULA "B" SEED, MULCH, PER PENN DOT 408.
5. PROVIDE WATERTIGHT CONNECTIONS BETWEEN PIPE AND ANTI–SEEP COLLARS.
6. OUTLET PIPES SHALL BE CONSTRUCTED OF CLASS III REINFORCED CONCRETE WITH RUBBER GASKETS IN CONFORMANCE WITH AASHTO M170, M198, AND M207.
7. LIFT HOLES SHALL BE PLUGGED WITH PRE CAST CONCRETE PLUGS ONLY.
8. SEAL ALL ANNULAR SPACES BETWEEN PIPES AND INLETS WITH CONCRETE ONLY.
9. OUTLET STRUCTURES ARE TO BE ARCHITECTURALLY TREATED.
10. A PERMANENT LINING MATERIAL IS TO EXTEND A MINIMUM OF (2) FEET BELOW THE SPILLWAY CREST ELEVATION ON THE INSIDE OF EACH BASIN AND TO THE BOTTOM OF BERM ON THE OUTSIDE OF EACH BASIN.

BASIN	(a)	(b)	(c)	(d)	(e)	(f)	(h)	(i)	(j)	(k)	(m)	(n)	(o)	(p)	(q)	(r)	(s)	(t)
1A	268.80	N/A*	271.50	DW-ENDWALL	268.70	18'–18"RCP @ 0.56%	1	7'	10'	273.50	3	4	N/A	264.50	NAG P300	268.70	268.80	0%
1B	277.00	279.30	280.00	DW-ENDWALL	276.76	12'–18"RCP @ 2.00%	1	8'	10'	282.00	4	4	277.00	273.50	NAG P300	276.40	276.50	0%
1C	281.50	283.90	284.50	DW-ENDWALL	281.00	60'–18"RCP @ 0.83%	2	10'	10'	286.50	4	4	281.50	278.50	NAG P300	281.40	281.50	0%
1D	280.25	282.75	284.25	DW-ENDWALL	280.00	35'–18"RCP @ 0.71%	2	10'	10'	286.25	4	4	280.25	280.25	NAG P300	N/A	N/A	0%

*DW ENDWALL

STORMWATER BASIN DETAILS TABLE

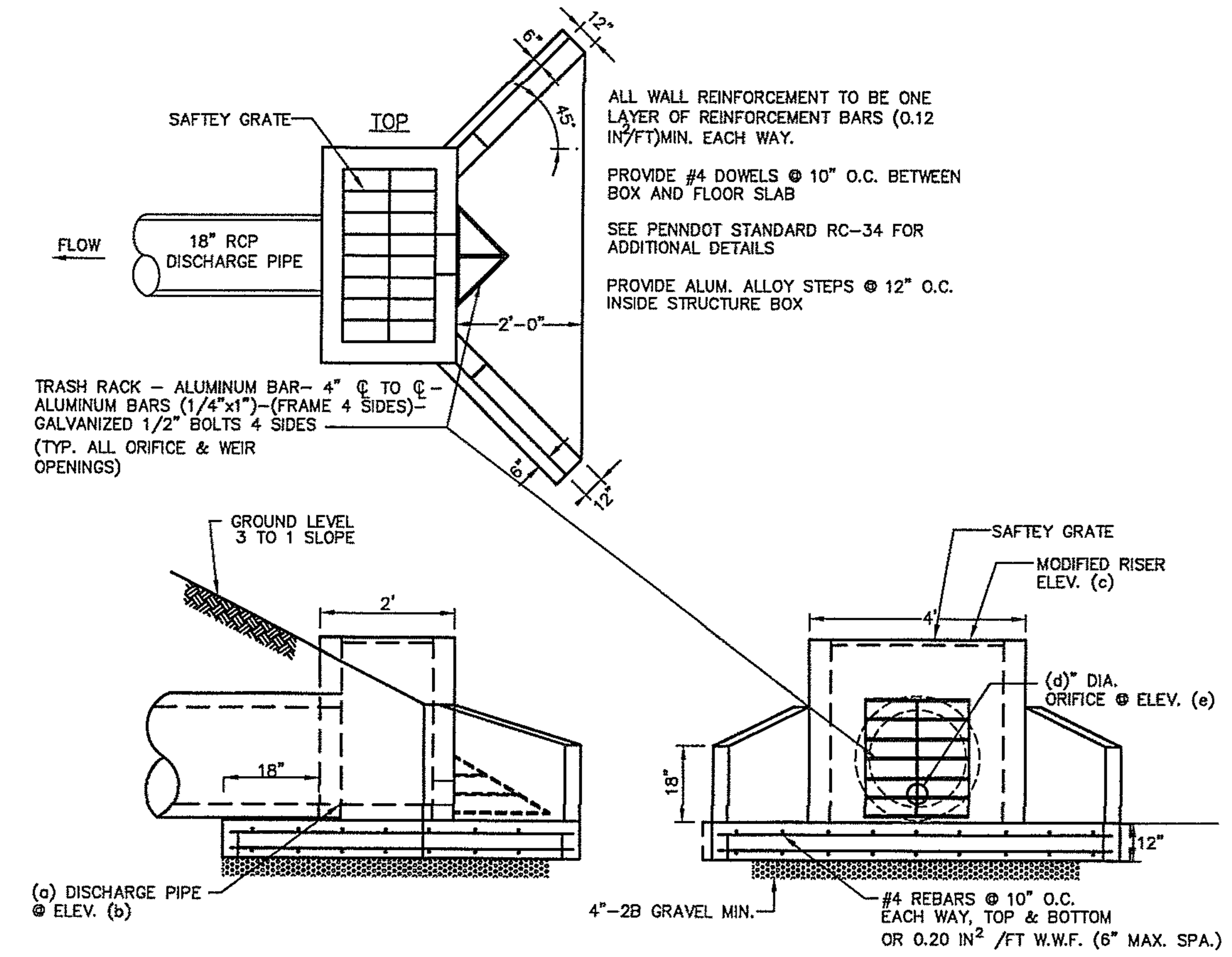

ALL WALL REINFORCEMENT TO BE ONE LAYER OF REINFORCEMENT BARS (0.12 IN²/FT)MIN. EACH WAY.

PROVIDE #4 DOWELS @ 10" O.C. BETWEEN BOX AND FLOOR SLAB

SEE PENNDOT STANDARD RC–34 FOR ADDITIONAL DETAILS

PROVIDE ALUM. ALLOY STEPS @ 12" O.C. INSIDE STRUCTURE BOX

	BASIN	STRUCTURE	(a)	(b)	(c)	(d)	(e)
*	1A	C–19	18"	268.80	DW ENDWALL	N/A	N/A
	1B	D–20	18"	277.00	279.30	6"	277.00
	1C	B–8	18"	281.50	283.90	6"	281.50
	1D	A–10	18"	280.25	282.75	6"	280.25

BASIN OUTLET STRUCTURE WITH TRASH RACK

*BASIN 1A OUTLET STRUCTURE IS A DW ENDWALL WITH 18" OPENING AND OUTFALL PIPE. NO ORIFICE PLATE IS REQUIRED.

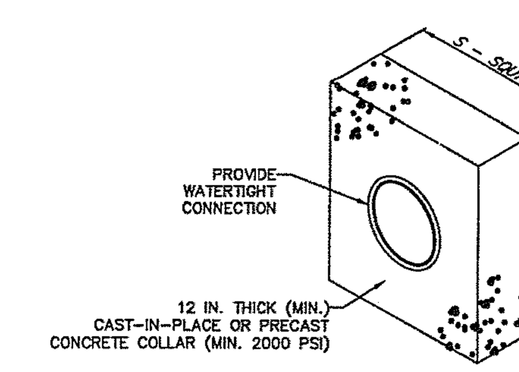

BASIN OR TRAP NO.	PIPE SIZE (IN)	S (IN)	NO. OF COLLARS	RISER TO FIRST COLLAR (FT)	COLLAR SPACING (FT)
1A	18	72	1	7	7
1B	18	72	1	8	8
1C	18	72	2	10	10
1D	18	72	2	10	10

NOTES:

ALL COLLARS SHALL BE INSTALLED SO AS TO BE WATERTIGHT.

COLLAR SIZE AND SPACING SHALL BE AS INDICATED WITHIN TABLE.

STANDARD CONSTRUCTION DETAIL #7-16
CONCRETE ANTI-SEEP COLLAR FOR PERMANENT BASINS OR TRAPS
NOT TO SCALE

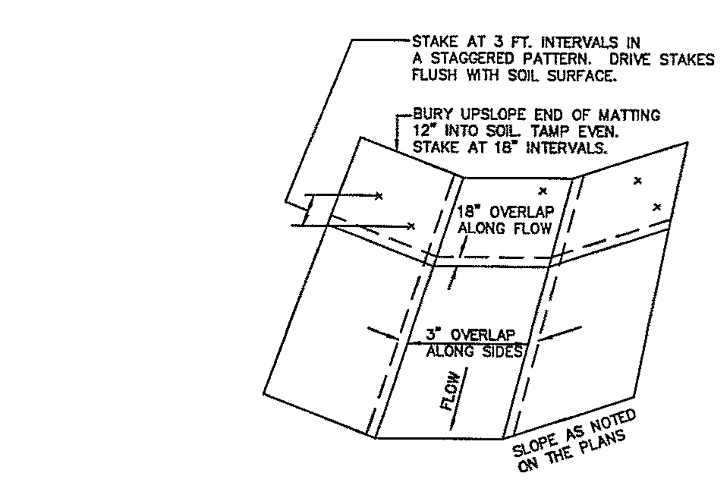

LINING INSTALLATION

* CONSTRUCT INTERMEDIATE CHECK SLOT ANCHORAGE EVERY 25 FT. TUCK 2 OR 3 FOLDS OF MAT INTO A 6" DEEP SLOT DUG PERPENDICULAR TO THE FLOW DIRECTION. PLACE AN ROW OF BIODEGRADABLE STAKES ON BOTH SIDES OF THE CHECK SLOT. LAY MATTING LOOSELY, DO NOT STRETCH.
* ALSO REFER TO MANUFACTURES' LINING INSTALLATION DETAIL AND VEGETATIVE STABILIZATION SPECIFICATIONS FOR SOIL AMENDMENTS, SEED MIXTURES, AND MULCHING INFORMATION.

SPILLWAY DATA

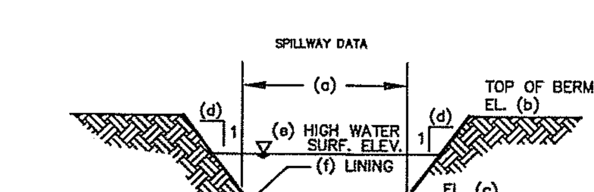

BASIN EMERGENCY SPILLWAY

NOTE: EMERGENCY SPILLWAY SHALL BE LINED WITH NORTH AMERICAN GREEN P300 PERMANENT TURF REINFORCEMENT MAT OR EQUIVALENT TO TOE OF BERM. THE LINING SHALL EXTEND A MINIMUM OF TWO (2) FEET BELOW THE SPILLWAY CREST ELEVATION ON THE INSIDE OF EACH BASIN AND TO THE BOTTOM OF THE BERM ON THE OUTSIDE OF EACH BASIN.

BASIN	(a)	(b)	(c)	(d)	(e)	(f)
1A	33'	273.50	271.50'	4'	271.73'	NAG P300
1B	22'	282.00'	280.00'	4'	280.75'	NAG P300
1C	13'	286.50'	284.50'	4'	285.17'	NAG P300
1D	20'	286250'	284.25'	4'	284.29'	NAG P300

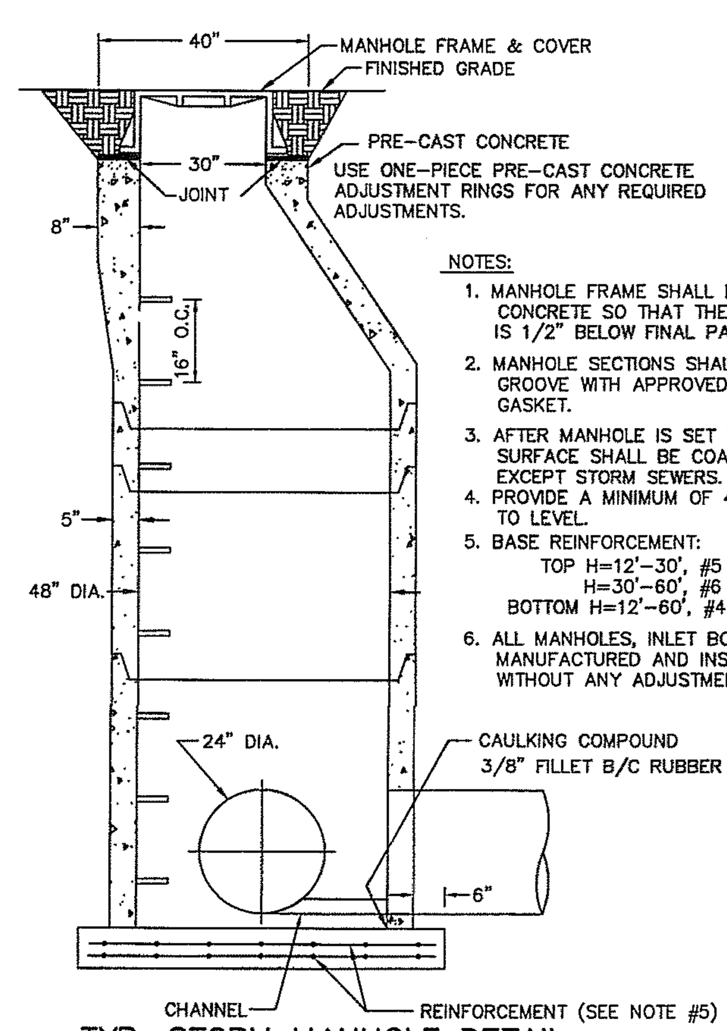

NOTE:
TILT THE INLET BOXES OR CAST THE PROPER CAMBER INTO THE TOP TO MATCH THE ROAD GRADE.

NOTES:
1. MANHOLE FRAME SHALL BE ONE–PIECE PRECAST CONCRETE SO THAT THE TOP OF THE FRAME IS 1/2" BELOW FINAL PAVED SURFACE.
2. MANHOLE SECTIONS SHALL BE TONGUE & GROOVE WITH APPROVED RUBBER RING GASKET.
3. AFTER MANHOLE IS SET THE ENTIRE OUTER SURFACE SHALL BE COATED WITH BITUMASTIC, EXCEPT STORM SEWERS.
4. PROVIDE A MINIMUM OF 4" #2B STONE BASE TO LEVEL.
5. BASE REINFORCEMENT:
TOP H=12'–30', #5 @ 12" OR .18S.I./FT. WWF
H=30'–60', #6 @ 12" OR .22S.I./FT. WWF
BOTTOM H=12'–60', #4 @ 12" OR .28S.I./FT. WWF
6. ALL MANHOLES, INLET BOXES AND TOPS SHALL BE MANUFACTURED AND INSTALLED TO FIT EXACTLY WITHOUT ANY ADJUSTMENT.

TYP. STORM MANHOLE DETAIL

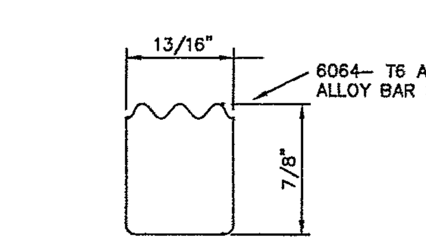

ENLARGED SECTION A–A

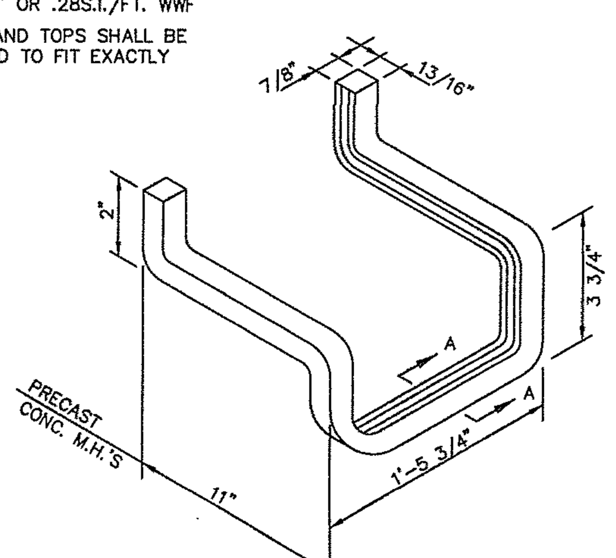

DROP FRONT MANHOLE/INLET STEP

NOTE: STEPS SHALL BE INSTALLED IN ALL INLETS AND MANHOLES OVER 4 FEET DEEP.

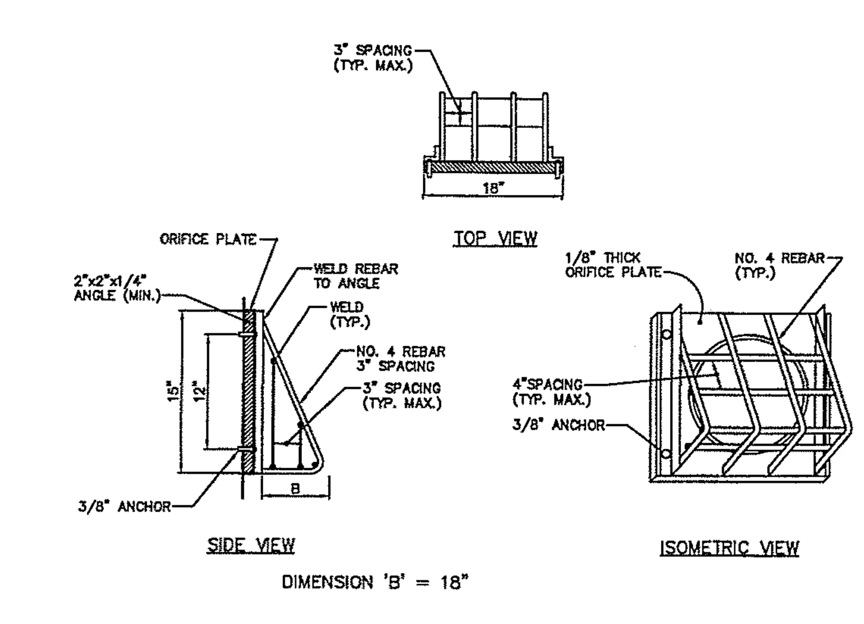

DIMENSION 'B' = 18"

ORIFICE TRASH RACK DETAIL

AFTER RACK IS CONSTRUCTED (WELDED) THE ASSEMBLY SHALL BE PAINTED WITH RUST PROOF COATING.

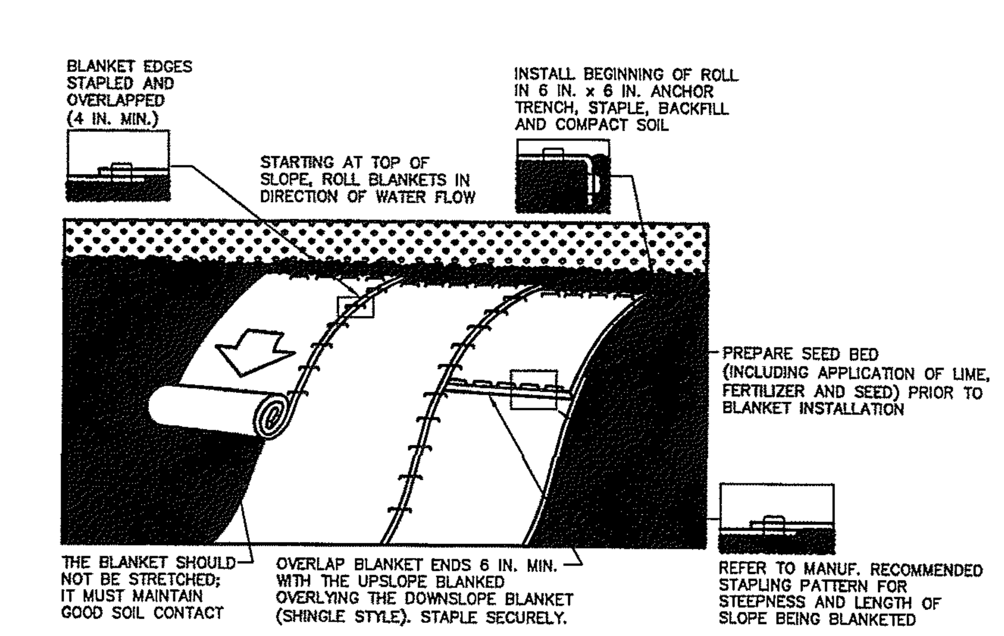

NOTES:

SEED AND SOIL AMENDMENTS SHALL BE APPLIED ACCORDING TO THE RATES IN THE PLAN DRAWINGS PRIOR TO INSTALLING THE BLANKET.

PROVIDE ANCHOR TRENCH AT TOE OF SLOPE IN SIMILAR FASHION AS AT TOP OF SLOPE.

SLOPE SURFACE SHALL BE FREE OF ROCKS, CLODS, STICKS, AND GRASS.

BLANKET SHALL HAVE GOOD CONTINUOUS CONTACT WITH UNDERLYING SOIL THROUGHOUT ENTIRE LENGTH. LAY BLANKET LOOSELY AND STAKE OR STAPLE TO MAINTAIN DIRECT CONTACT WITH SOIL. DO NOT STRETCH BLANKET.

THE BLANKET SHALL BE STAPLED IN ACCORDANCE WITH THE MANUFACTURER'S RECOMMENDATIONS.

BLANKETED AREAS SHALL BE INSPECTED WEEKLY AND AFTER EACH RUNOFF EVENT UNTIL PERENNIAL VEGETATION IS ESTABLISHED TO A MINIMUM UNIFORM 70% COVERAGE THROUGHOUT THE BLANKETED AREA. DAMAGED OR DISPLACED BLANKETS SHALL BE RESTORED OR REPLACED WITHIN 4 CALENDAR DAYS.

STANDARD CONSTRUCTION DETAIL #11-1
EROSION CONTROL BLANKET INSTALLATION
NOT TO SCALE

"FINAL"

NO.	DATE	DESCRIPTION	BY
8	1/9/17	REVISED PHASE "D"	JAS
7	11/9/15	REVISED PHASE "B"	JAS
6	8/12/14	REV MIDDLE CREEK ROAD	RMC
5	9/6/13	REV. PER. TWP. ENG. COMMENTS	RMC
4	8/23/13	REV. PER. TWP. ENG. LETTER DATED 7/31/13	JAS
3	6/24/13	REV. PER TWP. ENG. LETTERS DATED 1/3/13, 2/7/13	JAS
2	5/6/13	REV. AS PER NPDES MINOR REVISION	JAS
1	11/30/12	REV. AS PER TWP. ENG. LETTER DATED 6/6/12	JAS

RENNINGER PROPERTY SUBDIVISION
POST CONSTRUCTION STORMWATER MANAGEMENT DETAILS

PREPARED FOR
GAMBONE SWAMP PIKE, L.P.
NEW HANOVER TOWNSHIP
MONTGOMERY COUNTY
PENNSYLVANIA

Chambers Associates, Inc.
Consulting Engineers and Surveyors
2962 Skippack Pike P.O. Box 678
Worcester, PA 19490–0678
484–991–8187

SCALE	DATE	JOB	DRAWING NO.
N.T.S.	4/27/12	485–084	SHEET 31 of 54
MANAGER: JPH			DRAWN BY: JAS

L:\Projects\485084\19-Submissions\SUBMISSION SET OF PLANS 1-9-17\DETAILS-updated-nodes-details.dwg, 31, 1/26/2017 11:33:41 AM, RICOH MP C4/2200 PS

NO.	REVISION/ISSUE	DATE
3	TOWN PLANNER'S COMMENTS	9/6/2013
2	TOWN PLANNER'S COMMENTS	8/22/2013
1	TOWN PLANNER'S COMMENTS	8/7/2013

GENERAL NOTES

LANDSCAPE IMPROVEMENTS

PLANTING PLAN

CHRISTOPH G. RUMMLER, RLA

PROJECT:

Renninger Property

NEW HANOVER TOWNSHIP
MONTGOMERY COUNTY, PA

PREPARED FOR:

GAMBONE SWAMP PIKE, L.P.

FAIRVIEW VILLAGE, PA 19409

Rummler Associates, LLC
Landscape Architecture Land Planning Therapeutic Landscape
30 Pickwick Drive, Doylestown, PA 18901
Telephone: 215.345.4306 Fax: 215.345.4306 rummlerassociates1@verizon.net

JOHN H. KENNEDY & ASSOCIATES, LLC
BOX 175, MAINLAND PA 19451-0175 215-513-1720
EMAIL: JOHN.KENNEDY@LANDPLAN.COM FAX: 215-513-1721

DATE: DECEMBER 17, 2012
SCALE: 1"=60'
SHEET: 32 OF 54

L1

PROPOSED INTERNAL OPEN SPACE

AREA "A":	6,005 SF
AREA "B":	2,835 SF
AREA "C":	2,066 SF
TOTAL:	10,906 SF

MINIMUM ALLOWED INTERNAL OPEN SPACE AREA IS 1,000 SF.

INTERNAL OPEN SPACE
AREA "A": 6,005 SF

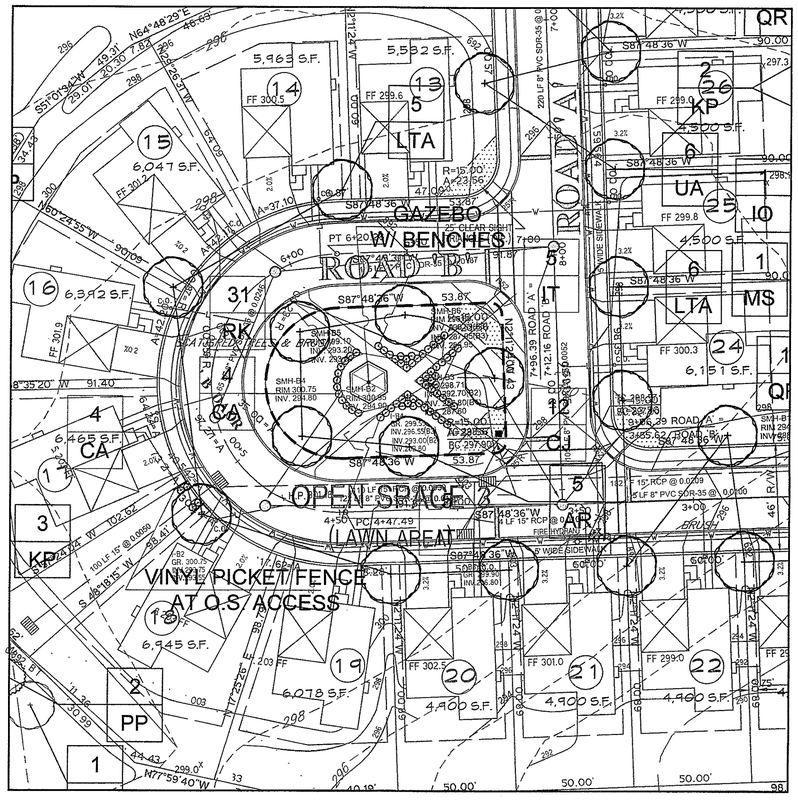

INTERNAL OPEN SPACE
AREA "C": 2,066 SF

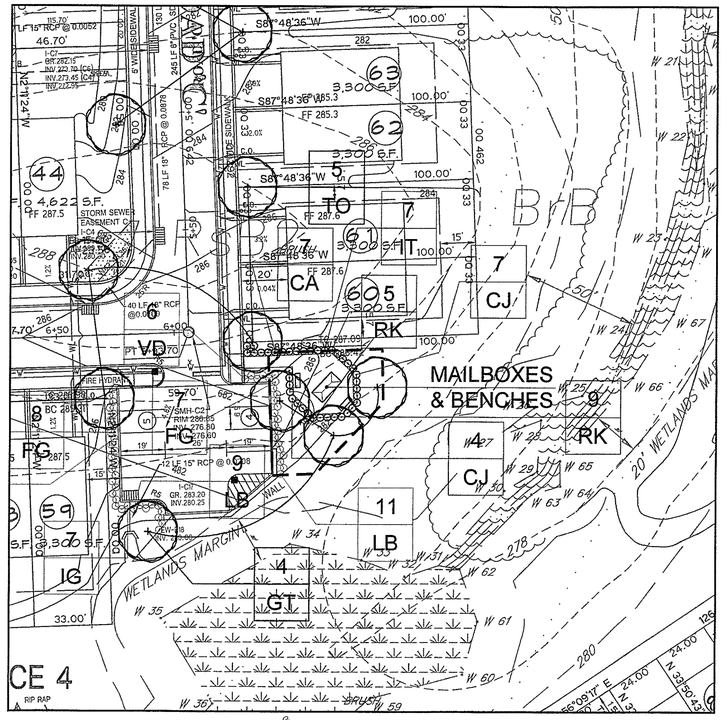

INTERNAL OPEN SPACE
AREA "B": 2,835 SF

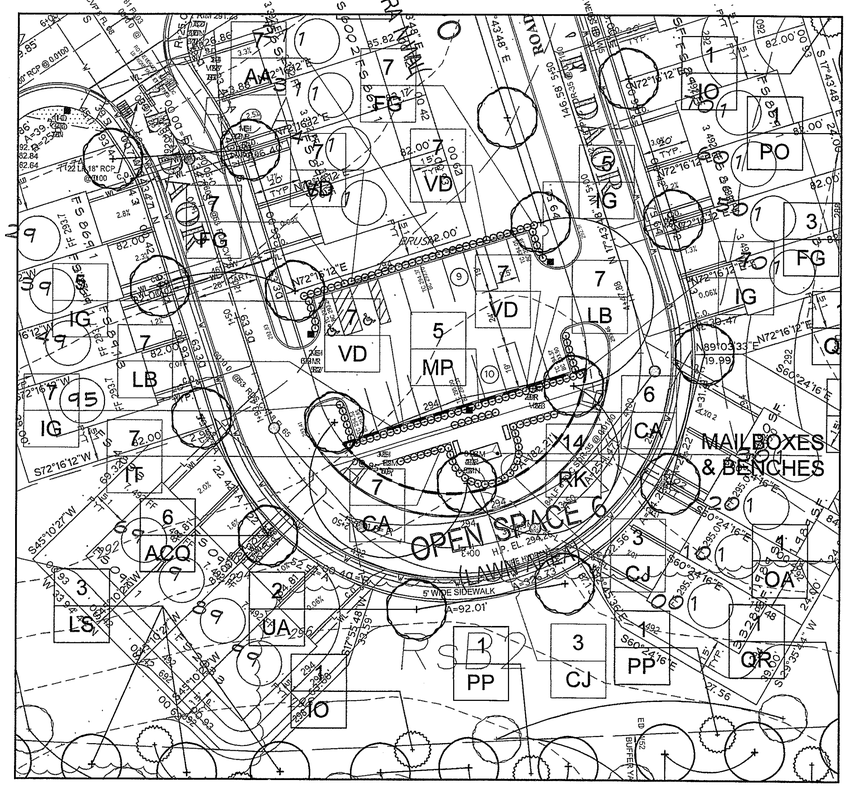

GENERAL NOTES

NO.	REVISION/ISSUE	DATE
3	TOWN PLANNER'S COMMENTS	9/6/2013
2	TOWN PLANNER'S COMMENTS	8/22/2013
1	TOWN PLANNER'S COMMENTS	8/7/2013

LANDSCAPE IMPROVEMENTS

PUBLIC SPACES
PLANTING
PLAN

PENNSYLVANIA
CHRISTOPH G. RUMMLER
LANDSCAPE ARCHITECT
LA-001274
PROFESSIONAL

CHRISTOPH G. RUMMLER, RLA

PROJECT:

Renninger Property
NEW HANOVER TOWNSHIP
MONTGOMERY COUNTY, PA

PREPARED FOR:

GAMBONE SWAMP PIKE, L.P.

FAIRVIEW VILLAGE, PA 19409

Rummler Associates, LLC
Landscape Architecture Land Planning Therapeutic Landscape
55 Pickwick Drive, Doylestown, PA 18901
Telephone: 215.345-4306 Fax: 215.345.4306 rummlerassociates1@verizon.net

JOHN H. KENNEDY & ASSOCIATES, LLC
BOX 175, MARKLAND PA 19451-0175 215-513-1720
EMAIL: JOHN.KENNEDY@LANDPLAN.COM FAX: 215-513-1721

DATE: DECEMBER 17, 2012	L2
SCALE: 1"=30'	
SHEET: 33 OF 54	

Landscape Notes:

1. All plant material shall meet the Standards of "American Standard for Nursery Stock" by the American Society of Nurserymen (1990) or most recent edition.
2. All plant material shall be installed in accordance with the planting practices stated in Chapter 3 of "The Maintenance" by P.P. Pirone (Fifth or most recent edition).
3. The landscape contractor shall contact the owner and the design professional to request a final inspection for acceptance at the end of guaranty period.
4. All plant material shall be guaranteed for a minimum of eighteen (18) months from the day of final approval of the landscape installation by the owner.
5. Maintenance shall include watering, weeding, cultivating, fertilizing, spraying, tightening and repairing of guys, removal and replacement of dead material, resetting settled plants to proper grades or upright position, and other necessary operations as may be required to keep the plants in a live and healthy growing condition.
6. Plant material shall be provided and installed as shown on the landscape plans and associated detail sheets. Pricing shall include labor, materials, plants, equipment, incidents, guarantee and clean-up.
7. Plants shall be typical of their species and variety have normal growth habits, densely foliated, well developed branches, vigorous root systems, be free from defects and injuries and suitable for street tree use.
8. All Plantings shall be a reasonable distance from existing structures or sidewalks, with the exception of shrubs, ground covers and perennials, which may be planted wherever it is desirable to do so. No plantings or structures shall be located directly above sanitary sewers or laterals or immediately adjacent to lamp posts or fire hydrants.
9. All injured roots shall be pruned to make clean ends before planting. After backfilling, prune all plants in accordance with standard horticultural practice to preserve natural character of the plant. The main leaders of trees must not be pruned.
10. The contractor shall be responsible for determining where the underground utilities exist on-site. The contractor shall exercise extreme caution when excavating near these utilities.
11. Plants shall receive a three (3) inch layer of doubled shredded hardwood bark mulch, aged a minimum of two (2) years or equal. All plant beds and tree rings are to be V-ditch (spaded) edged.
12. Final seeded and sodden areas shall contain a mix of Bluegrass and fine fescues (see permanent lawn seed mix notes).
13. Planting shall be conducted under seasons which are normal for such work. At the option and the full responsibility of the contractor, planting operations may be conducted under reasonable conditions. In general, plant during the following seasons unless otherwise approved by the landscape architect.

    Broadleaf Evergreen Trees and Shrubs:
    From the time frost leaves the ground until new growth is well developed (Spring)

    Groundcover
    After the danger of frost has past (Spring & Early Summer)
14. All disturbed pervious areas, except planting beds, shall be seeded and/or stabilized with specified wood fiber netting or mulch.
15. Before mixing planting mixture, clean topsoil of roots, plants, sods, stones, clay lumps, and other extraneous materials harmful or toxic plant growth.
16. Planting mixture shall contain topsoil from local sources or from areas having similar soil characteristics to that found at the project site. Obtain topsoil only from naturally, well drained site where topsoil occurs in a depth of not less than four (4) inches. Do not obtain topsoil from bogs or marshes.
17. Soil test reports by an independent laboratory, recognized by the State Department of Agriculture shall provide analysis, recommended amendments and rates for native and imported topsoil. The soil analysis shall state percentages of organic matter; graduation of sand, silt, and clay content; caton exchange capacity; deleterious material; pH; and mineral and plant-nutrient content of topsoil (the report shall convey the suitability of topsoil for plant growth). The soil analysis and amendment recommendation are to be furnished to the owner and project landscape architect, if owner determines such analysis is necessary.
18. Planting mixture shall consist of native or imported topsoil, manufactured topsoil, or surface soil modified to become topsoil; mixed with the following ratio of amendments:
    1. Ratio of Loose Compost to Topsoil by Volume: 1:4
    2. Weight of Lime per 1000 Sq. Ft.: Based on State Agricultural analysis and recommendations.
    3. Weight of Iron Sulfate per 1000 Sq. Ft.: Based on State Agriculture analysis and recommendations.
    4. Volume of sand Plus 10 Percent Diatomaceous earth per 1000 Sq. Ft.: 10%
    5. Weight of Slow-Release Fertilizer per 1000 Sq. Ft.: Based on Agricultural analysis and recommendations.
19. All trees and shrub pits shall be inspected and tested for adequate drainage if owner determines such testing is necessary.
20. All groundcovers shall be planted a minimum of twelve (12) inches from edge of walks, buildings, walls, trees, shrubs, etc.
21. Plants to be laid out and reviewed by design professional in field prior to planting, if owner determines it is necessary.
22. All street trees shall be minimally a 2" caliper at 4'-0" above finished grade and 12 foot in height. Street trees shall be clear of branches, to a height of seven (7) feet from the ground and have a well-defined leader.
23. No street or shade trees are to be planted in the vehicular sight triangles (measured 25' or 50' along face of curb).

General Notes:

1. It is imperative that utility companies and project general contractor are notified prior to any excavation and/or construction.
2. The contractor, during the performance of all work associated with the construction of the project, is responsible for compliance with all federal, state and local laws, codes and regulations.
3. Any discrepancies found between the drawings and site conditions or any inconsistencies or ambiguities in the drawings shall be immediately reported to the owner and landscape architect, in writing, who shall promptly address such inconsistencies or ambiguities. Work done by the contractor after his discovery of such discrepancies, inconsistencies or ambiguities shall be done at the contractor's own risk.
4. Building Materials. The operator shall remove from this site, recycle, or dispose of all building materials and wastes in accordance with the DEP's Solid Waste Management regulations. The contractor shall not illegally bury, dump, or discharge any building waste material or wastes at this site unless directed otherwise by owner.
5. Soil Waste. All excavated soil shall be used on site, as fill material where possible per owner's direction. Any excess material not used on site may only be disposed off-site at a facility with a valid earth disturbance and NPDES permit approved and were all BMPs are properly installed.
6. Erosion & Sediment Control. Erosion and Sedimentation controls must be constructed, stabilized, and functional before site disturbance. The operator shall assure that the proper erosion and sedimentation controls have been properly and completely implemented. All temporary erosion control measures are to be maintained by the contractor and inspected weekly and/or after each rainfall event. An area shall be considered to have achieved final stabilization when it has a minimum uniform 70% perennial vegetation cover or other permanent non-vegetative cover with a density sufficient to resist accelerated surface erosion.
7. All existing trees and shrubs to be preserved on site shall be protected against construction damage by installing specified tree protection measures.
8. Seeding Areas: The bottom of bio-retention storm water basins shall utilize the bio-retention seed mix. The sides of all basins, dry basins and surrounding upland areas shall utilize the basin and upland seed mix. All other areas adjacent to roads, driveways, trails and buildings shall utilize the hydroseed lawn mix.
9. Tree locations: Trees shall not be planted any closer than 15' to any light pole.
10. Underground utility markouts by the utility companies shall be ordered. No certification is made by Kennedy & Associates, or Rummler Associates LLC as to the actual underground position of any utilities or the completeness of accuracy of the utility markouts as provided by others.

Basin Plant Material Seeding Specifications

Upland & Meadow Sites

Site Preparation

If the area to be seeded had herbicide previously applied , allow time for the herbicide residue to break down prior to planting the meadow. Eradicate existing vegetation by having a licensed spray technician apply an approved herbicide; i.e. glyphosate (roundup), or tilling the weeds into the soil. Recommended pre-seeding weed control will require repeated tilling or spraying two applications of glyphosate (at least two weeks apart). Close mowing two weeks prior to spraying is recommended. Glyphosate must be applied to vegetative growth in order to kill undesirable plants and their roots. The second application is needed only if the first application is insufficient. If excess dead plant material remains on the surface, tilling may be necessary to achieve good seed-to-soil contact and sunlight penetration.

Area to be seeded should have full sun for at least half of the day and have good air circulation.

Natural fertility on these designated areas is generally adequate. No fertilizer or lime is needed. Check the soil pH and select species adapted to that pH.

Recommended seeding methods are broadcast, hydroseed, or drill seed.

General Maintenance

Monitoring and controlling grassy weeds or persistent perennials is essential in the first and second years. Burning (by experiencing professionals) about every three years in early spring can prevent shrub invasion.

First Year Maintenance

When undesirable weed vegetation reaches 12"-18" tall, mow to no less than 6" high (with a mower and/or weed eater) to prevent the weeds from developing seed. this allows sunlight to reach desired species.

Second Year Maintenance

Mow once, close to the ground, in early spring. This will encourage young native plants to emerge and rapid warming of the soil.

Seed Mix: Basin & Uplands

Eastern Ecotype Native Grass Mix ERNMX-177 as supplied by Ernst Seeds, Meadville, PA (phone 800-873-3321).

35.00%	Schizachyrium scoparium	Little Bluestem
25.00%	Elymus virginicus	Virginia wild Rye
18.00%	Sorghastrum nutans	Indiangrass
15.00%	Andropogon gerardii	Big Bluestem, 'Niagara'
6.00%	Panicum virgatum	Switchgrass, 'Shelter'
1.00%	Agrostis perennans	Autumn Bentgrass

Seeding Rate: 10-15 lb per acre, or 1/3-1/2 lb per 1,000 sq ft

Note: Additional soil preparation and seeding guidelines are provided by Ernst Seeds and Montgomery County Conservation District and are to be followed.

Storm Water Bio-retention Basins

Site Preparation

Invasive species, particularly those that will adapt to wet conditions, are to be removed or sprayed before they become incorporated into the site. Normal vegetation can be worked into the topsoil, which should be stockpiled until the final grade has been established.

Per engineers design and specifications, on-site construction of the berm and outlets must be executed carefully in order to maintain structural integrity. the infiltration and plant growth areas should be loose and friable, high in organic matter, and completed without compactions from heavy equipment. Use the "dig and drop" method; use excavator to dig and drop each area of the bottom soil in a loose manner. Based on soil analysis, to be completed by state agricultural institutions, incorporate lime, composted leaves and/or grass clippings per recommendations. native vegetation is to be seeded over this uneven, absorbent surface.

Seeding Methods

Seeding should begin immediately upon completion of the structure while the soil is still friable and before invasive weeds emerge. Plan seeding before the basin is flooded, or allow the basin to drain to a few inches before seeding. Broadcast seed evenly over each unit by hand seeding or hydroseeding. Use seeding rates as listed below. Barley, oats, or rye can provide temporary vegetation to protect the soil in storm water management facilities until permanent vegetation can be established. Straw mulch or straw coconut mats can be used to control erosion and protect emerging seedlings from extreme temperatures and drying out. Mulch should be sparse to allow sunlight to reach the ground.

Irrigation of seeded areas may be required until seedlings become established.

General Maintenance

In addition to structural maintenance, siltation needs to be removed as needed. plants need to be trimmed back to maintain aesthetic value and invasive species need to be controlled.

Seed Mix: Bio-retention Basins

Native Detention Area Mix, ERNMX-183 as supplied by Ernst Seeds, Meadville, PA (phone 800-873-3321).

25.00%	Panicum clandestinum	Deer Tongue, 'Tioga'
20.00%	Carex vulpinoidea	Fox Sedge
20.00%	Elymus virginicus	Virginia Wild Rye
15.00%	Agrostis perennans	Autumn Bentgrass
15.00%	Agrostis scabra	Ticklegrass (Rough Bentgrass)
5.00%	Juncus tenuis	Path Rush

Seeding Rate: 20 lb per acre, or 1/3-1/2 lb per 1,000 sq ft

Note: Additional soil preparation and seeding guidelines are provided by Ernst Seeds and Montgomery County Conservation District and are to be followed.

REQUIRED STREET TREES:

LINEAR FEET OF FRONTAGE*	REQUIRED TREE SPACING	REQUIRED TREES	PROPOSED TREES
7,471 LF	60'	125	149

*LINEAR FEET OF FRONTAGE CALCULATION EXCLUDES INTERSECTIONS AND SIGHT TRIANGLES.

Quantity	Symbol	Botanical Name	Common Name	Size	Root	Remarks
		Street Trees				
11	ACQ	Acer campestre 'Queen Elizabeth'	Queen Elizabeth Hedge Maple	2" Caliper @ DBH	B & B	Full, columnar form
25	AR	Acer rubrum	Red Maple	2" Caliper @ DBH	B & B	Full, pyramidal form
9	ARA	Acer rubrum 'Autumn Spire'	Autumn Spire Red Maple	2" Caliper @ DBH	B & B	Full, columnar form
14	ASN	Acer saccharum 'Newton Sentry'	Newton Sentry Sugar Maple	2" Caliper @ DBH	B & B	Full, columnar form
9	GT	Gleditsia tricanthos inermis	Thornless Honeylocust	2" Caliper @ DBH	B & B	Full, oval form
13	LT	Liriodendron tulipifera	Tulip Tree	2" Caliper @ DBH	B & B	Full, oval form
11	LTA	Liriodendron tulipifera 'Arnold'	Arnold Tulip Tree	2" Caliper @ DBH	B & B	Full, columnar form
13	TO	Taxodium distichum 'Mickelson'	Shawnee Brave Bald-Cypress	2" Caliper @ DBH	B & B	Full, pyramidal form
11	TA	Tilia americana 'McKSentry'	American Sentry Linden	2" Caliper @ DBH	B & B	Full, columnar form
33	UA	Ulmus americana 'Valley Forge'	Valley Forge American Elm	2" Caliper @ DBH	B & B	Full, vase form
		Off-Street Parking Areas				
		Canopy Trees				
4	ACQ	Acer campestre 'Queen Elizabeth'	Queen Elizabeth Hedge Maple	2" Caliper @ DBH	B & B	Full, columnar form
4	GT	Gleditsia tricanthos inermis	Thornless Honeylocust	2" Caliper @ DBH	B & B	Full, oval form
2	UA	Ulmus americana 'Valley Forge'	Valley Forge American Elm	2" Caliper @ DBH	B & B	Full, rounded form
		Hedge				
20	AA	Aronia arbutifolia	Red Chokeberry	4' Height	Container	Full, rounded form
43	FG	Fothergilla gardenii	Dwarf Fothergilla	4' Height	Container	Full, rounded form
47	IG	Ilex glabra	Inkberry	4' Height	Container	Full, rounded form
43	LB	Lindera benzoin	Spicebush	4' Height	Container	Full, upright form
16	MP	Myrica pensylvanica	Northern Bayberry	4' Height	Container	Full, upright form
15	VD	Viburnum dentatum	Arrowwodd Viburnum	4' Height	Container	Full, rounded form

Quantity	Symbol	Botanical Name	Common Name	Size	Root	Remarks
		Buffer Class A, B & C				
		Canopy Trees				
24	FG	Fagus grandifolia	American Beech	2" Caliper @ DBH	B & B	Full, rounded form
31	LS	Liquidambar styraciflua	Sweet Gum	2" Caliper @ DBH	B & B	Full, rounded form
30	QR	Quercus rubra	Northern Red Oak	2" Caliper @ DBH	B & B	Full, rounded form
		Flowering Trees				
18	AC	Amelanchier canadensis	Shadblow Serviceberry	2" Caliper @ DBH	B & B	Full, oval form
13	KP	Koelreuteria paniculata	Golden Rain Tree	2" Caliper @ DBH	B & B	Full, rounded form
14	MS	Magnolia soulangeana	Saucer Magnolia	2" Caliper @ DBH	B & B	Full, rounded form
8	OA	Oxydendrum arboreum	Sourwood	2" Caliper @ DBH	B & B	Full, rounded form
		Evergreens				
22	IO	Ilex opaca	American Holly	4' Height	Container	Full, upright form
16	PO	Picea omorika	Serbian Spruce	4' Height	Container	Full, pyramidal form
10	PP	Picea pungens	Colorado Spruce	4' Height	Container	Full, pyramidal form
12	PM	Pseudotsuga menziesu	Douglas Fir	4' Height	Container	Full, pyramidal form
		Hedge				
11	AA	Aronia arbutifolia	Red Chokeberry	4' Height	Container	Full, rounded form
9	FG	Fothergilla gardenii	Dwarf Fothergilla	4' Height	Container	Full, rounded form
21	IG	Ilex glabra	Inkberry	4' Height	Container	Full, rounded form
9	LB	Lindera benzoin	Spicebush	4' Height	Container	Full, upright form
15	MP	Myrica pensylvanica	Northern Bayberry	4' Height	Container	Full, upright form
9	VD	Viburnum dentatum	Arrowwodd Viburnum	4' Height	Container	Full, rounded form
		Internal Open Space				
		Shrubs				
27	CA	Clethra alnifolia 'Hummingbird'	Hummingbird Summersweet	3' Height	Container	Full, oval form
29	CJ	Chaenomeles japonica 'Texas Scarlet'	Texas Scarlet quince	3' Height	Container	Full, rounded form
24	IT	Itea virginica	Virginia Sweetspire	3' Height	Container	Full, rounded form
59	RK	Rosa 'Knockout'	Knockout Rose	3' Height	Container	Full, rounded form
7	AA	Aronia arbutifolia	Red Chokeberry	3' Height	Container	Full, rounded form
14	FG	Fothergilla gardenii	Dwarf Fothergilla	3' Height	Container	Full, rounded form
24	IG	Ilex glabra	Inkberry	3' Height	Container	Full, rounded form
14	LB	Lindera benzoin	Spicebush	3' Height	Container	Full, rounded form
5	MP	Myrica pensylvanica	Northern Bayberry	3' Height	Container	Full, rounded form
28	VD	Viburnum dentatum	Arrowwodd Viburnum	3' Height	Container	Full, rounded form

Seeding Installation and Maintenance Specifications

	Type	Application
Lime*	Lime	6 Tons/Acre
Fertilizer*	Commercial 10-20-10	1000 Lbs/Acre***
Temporary Seeding	Annual Ryegrass	2 Lbs/1000 S.F.
Permanent Seeding**	Spreading Fescue	0.47 Lbs/1000 S.F.
	Chewing's Red Fescue	0.47 Lbs/1000 S.F.
	Kentucky Bluegrass	0.94 Lbs/1000 S.F.
	Perennial Ryegrass	0.31 Lbs/1000 S.F.
Mulch*	Hay or Straw	3 Tons/Acre

* To be used for both temporary and permanent seeding.
** Optimum Seeding Times: Feb.15 thru May 1
Aug. 15 thru Oct. 15
*** Fertilizer rate to be verified and adjusted per State Department of Agriculture soil analysis results and recommendations.

Note: Seed to be fresh, clean, dry, new-crop seed complying with AOSA's "Journal of Seed Technology; Rules for Testing Seeds" for purity and germination tolerances.

Six (6) inches of topsoil to be spread for the establishment of vegetation. Topsoil to meet ASTM D 5268, pH range of 5.5 to 7, a minimum of 4 percent organic material content; free of stones 1 inch or larger in any dimension and other extraneous materials harmful to plant growth.

Seeding

Sow seed with spreader or seeding machine. Do not broadcast or drop seed when wind velocity exceeds 5 mph. Evenly distribute seed by sowing equal quantities in two directions at right angles to each other.

- Sow seed at the rate shown in the above chart.
- Rake seed lightly into top 1/8 inch of topsoil, roll lightly, and water with fine spray.
- Protect seeded areas with slopes exceeding 1:4 with erosion-control blankets installed and stapled according to manufacture's written instructions.
- Protect seeded areas with slopes not exceeding 1:6 by spreading mulch. Spreads uniformly at a minimum rate of 3 tons/acre to form a continuous blanket 1 ½ inches in loose depth over seeded areas. Spread by hand, blower, or other suitable equipment.

Hydroseeding

Hydroseeding: Mix specified seed, fertilizer, and fiber mulch in water, using equipment specifically designed for hydroseed application. Continue mixing until uniformly blended into homogeneous slurry suitable for hydraulic application.

- Mix slurry with nonasphaltic tackifier.
- Apply slurry uniformly to all areas to be seeded in a one-step process. Apply mulch at a minimum slurry rate of 1500 lbs/acre dry weight but not less than the rate required to obtain specified seed-sowing rate.
- Apply slurry uniformly to all areas to be seeded in a two-step process. Apply first slurry applicaiton at a minimum rate of 500 lbs/acre dry weight but not less than the rate required to obtain specified seed-sowing rate. Apply slurry cover coat of fiber mulch at a rate of 1000 lbs/acre.

Maintenance Guidelines

The following recommendations are offered for monitoring and maintenance of turf grass areas:

- Begin maintenance immediately after each area is planted and continue until acceptable lawn is established, but not for less than 60 days from date of Substantial Completion.
- Maintain and establish lawn by watering, fertilizing, weeding, mowing, trimming, replanting, and other operations. Roll, regrade, and replant bare or eroded areas and remulch to produce a uniformly smooth lawn. (In areas where mulch has been disturbed by wind or maintenance operations, add new mulch. Anchor as required to prevent displacement.)
- Watering: Provide and maintain temporary piping, hoses, and lawn-watering equipment to convey water from sources and to keep lawn uniformly moist to a depth of 4 inches.
    - Schedule watering to prevent wilting, puddling, erosion, and displacement of seed or mulch. Lay out temporary watering system to avoid walking over muddy or newly planted areas.
    - Water lawn at a minimum rate of 1 inch per week.
- Mow lawn as soon as top growth is tall enough to cut. Repeat mowing to maintain specified height without cutting more than 40 percent of grass height. Remove no more than 40 percent of grass-leaf growth in initial or subsequent mowings. Do not delay mowing until grass blades bend over and become matted. Do not mow when grass is wet. Schedule initial and subsequent mowings to maintain the grass 2 to 3 inches high.
- Lawn Postfertilization: Apply fertilizer after initial mowing and when grass is dry. (See Specifications Chart above.)

GENERAL NOTES

NO.	REVISION/ISSUE	DATE
3	TOWN PLANNER'S COMMENTS	9/6/2013
2	TOWN PLANNER'S COMMENTS	8/22/2013
1	TOWN PLANNER'S COMMENTS	8/7/2013

LANDSCAPE IMPROVEMENTS

PLANT SCHEDULE & NOTES

CHRISTOPH G. RUMMLER, RLA

PROJECT:
Renninger Property
NEW HANOVER TOWNSHIP
MONTGOMERY COUNTY, PA

PREPARED FOR:
GAMBONE SWAMP PIKE, L.P.
PO BOX 287
FAIRVIEW VILLAGE, PA 19409

Rummler Associates, LLC
Landscape Architecture Land Planning Therapeutic Landscape
35 Pickwick Drive, Doylestown, PA 18901
Telephone: 215.345.4326 Fax: 215.345.4366 rummlerassociates1@verizon.net

JOHN H. KENNEDY & ASSOCIATES, LLC
BOX 175, MAINLAND PA 19451-0175 215-513-1720
EMAIL: JOHN.KENNEDY@LANDPLAN.COM FAX: 215-513-1721

DATE: DECEMBER 17, 2012
SCALE: NA
SHEET: 34 OF 54

L3

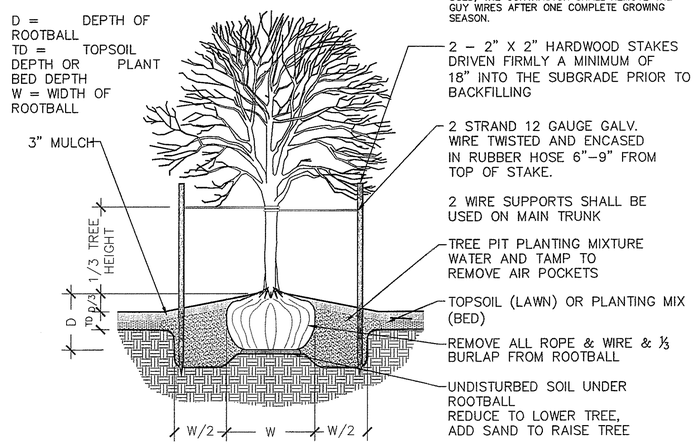

NOTE: TREE GUY WIRES SHOULD BE UTILIZED ONLY WHERE ENVIRONMENTAL CONDITIONS WARRANT SUCH USE. WHEN GUY WIRES ARE USED, THE CONTRACTOR SHALL REMOVE THE GUY WIRES AFTER ONE COMPLETE GROWING SEASON.

- 2 – 2" X 2" HARDWOOD STAKES DRIVEN FIRMLY A MINIMUM OF 18" INTO THE SUBGRADE PRIOR TO BACKFILLING
- 2 STRAND 12 GAUGE GALV. WIRE TWISTED AND ENCASED IN RUBBER HOSE 6"–9" FROM TOP OF STAKE.
- 2 WIRE SUPPORTS SHALL BE USED ON MAIN TRUNK
- TREE PIT PLANTING MIXTURE WATER AND TAMP TO REMOVE AIR POCKETS
- TOPSOIL (LAWN) OR PLANTING MIX (BED)
- REMOVE ALL ROPE & WIRE & ⅓ BURLAP FROM ROOTBALL
- UNDISTURBED SOIL UNDER ROOTBALL REDUCE TO LOWER TREE, ADD SAND TO RAISE TREE

SECTION TREE PLANTING

SCALE: NTS

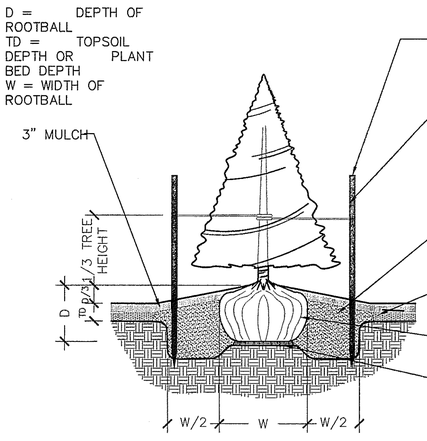

NOTE: TREE GUY WIRES SHOULD BE UTILIZED ONLY WHERE ENVIRONMENTAL CONDITIONS WARRANT SUCH USE. WHEN GUY WIRES ARE USED, THE CONTRACTOR SHALL REMOVE THE GUY WIRES AFTER ONE COMPLETE GROWING SEASON.

- 2 – 2" X 2" HARDWOOD STAKES DRIVEN FIRMLY A MINIMUM OF 18" INTO THE SUBGRADE PRIOR TO BACKFILLING
- 2 STRAND 12 GAUGE GALV. WIRE TWISTED AND ENCASED IN RUBBER HOSE 6"–9" FROM TOP OF STAKE.
- 2 WIRE SUPPORTS SHALL BE USED ON MAIN TRUNK
- TREE PIT PLANTING MIXTURE WATER AND TAMP TO REMOVE AIR POCKETS
- TOPSOIL (LAWN) OR PLANTING MIX (BED)
- REMOVE ALL ROPE & WIRE & ⅓ BURLAP FROM ROOTBALL
- UNDISTURBED SOIL UNDER ROOTBALL REDUCE TO LOWER TREE, ADD SAND TO RAISE TREE

SECTION EVERGREEN TREE PLANTING

SCALE: NTS

CertainTeed
Bufftech
Vinyl Fence Products
OR EQUIVALENT

CERTAINTEED CORPORATION FENCE,
DECK & RAIL DIVISION
231 SHIP CANAL PARKWAY
BUFFALO, NY 14218
TOLL FREE:1-800-233-8990
PHONE: (716) 823-3023
FAX: (716) 823-2843
www.certainteed.com

☑ SELECT DESIRED SIZE
☐ 5' HEIGHT X 6' WIDE
☐ 4' HEIGHT X 6' WIDE
☒ 3' HEIGHT X 6' Wide along open space access
4' Wide along sidewalk
☑ SELECT DESIRED COLOR
☒ WHITE

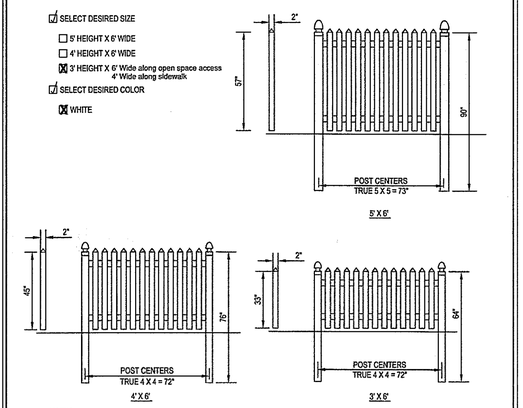

NOTES:
1. INSTALLATION TO BE COMPLETED IN ACCORDANCE WITH MANUFACTURER'S SPECIFICATIONS.
2. DO NOT SCALE DRAWINGS.
3. CONTRACTORS NOTE: FOR PRODUCT AND COMPANY INFORMATION VISIT www.CADdetails.com/info REFERENCE NUMBER 035-001.

OPEN SPACE ACCESS FENCE

SCALE: NTS

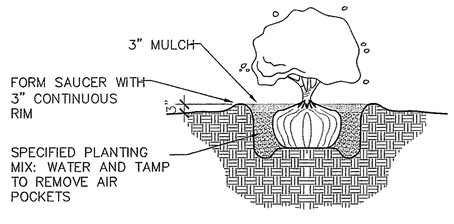

SECTION SHRUB PLANTING

SCALE: NTS

Each house must have two or more of the following:

1. An unenclosed porch, running across at least .75 of the house front, being at least 7 feet in width.
2. A front yard raised above sidewalk grade by at least 30 inches and a retaining wall of at least 18 inches at the sidewalk line.
3. A front yard enclosed by a wall or fence of permanent construction at least 30 inches in height and one flowerirg shrub per 60 inches across the width of the front of the house.*
4. Hedge of shrubs planted 18 inches on center for width of yard facing street and two flowering or canopy trees.*

*In order to comply with street tree requirements, flowering shrubs and/or canopy trees may need to be located in the side and rear yards.

When option #4 is chosen a minimum gap of 6' shall be maintained between the hedge and the driveway to maintain a safe sight triangle.

VILLAGE HOUSE

Minimum Lot Area:	6,000 sf*
Proposed Lot Area:	4,500 sf
Minimum Lot Width:	50'*
Proposed Unit Lot Width:	50'

*Note: Lot area may be reduced by 25% in the TN District. Lot width may be reduced 40% in the TN District.

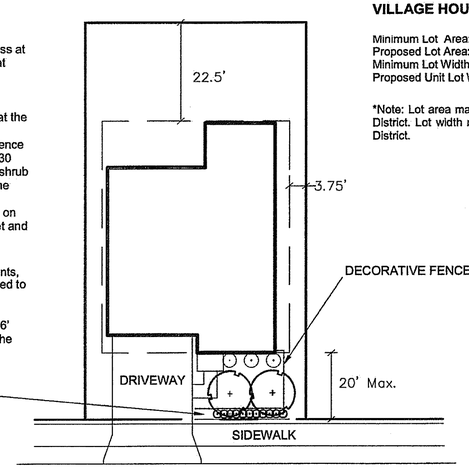

ROAD 'A'

VILLAGE HOUSE

SCALE: NTS

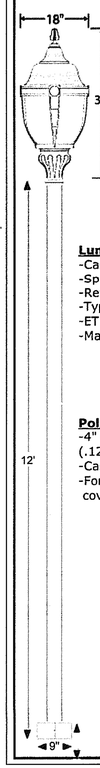

Luminaire: D731
-Cast aluminum fixture
-Spun aluminum top
-Refractive Acrylic Lens
-Type III or V Light Distribution
-ETL listed for Wet Location
-Max. 250w HPS or MH

Pole: DPO4/PLT-12
-4" OD Post
(.125 wall thickness)
-Cast aluminum base plate
-Formed Aluminum base cover is optional

amerlux exterior
5220 Shank Road
Pearland, Texas 77581
(800) 364-0098
(281) 997-5400
(281) 997-5441 Fax
www.amerluxexterior.com

Luminaire
D731
Light Source
100 MH
Voltage
☐ 120 ☐ 208 ☐ 240
☐ 277 ☐ 480 ☐ Other

Bracket

Pole
DPO4/PLT-12

Finish
Textured Black (TBK)
Polyester Powder Coat

Accessories

150WPSMH

Please Note
Due to the nature of the selection process and limitations of our web based system the information contained on this sheet must be confirmed with the factory before being used as a formal specification sheet.

TYPICAL LIGHT FIXTURE

SCALE: NTS

GENERAL NOTES

NO.	REVISION/ISSUE	DATE
3	TOWN PLANNER'S COMMENTS	9/6/2013
2	TOWN PLANNER'S COMMENTS	8/22/2013
1	TOWN PLANNER'S COMMENTS	8/7/2013

LANDSCAPE IMPROVEMENTS

DETAILS

CHRISTOPH G. RUMMLER, RLA

PROJECT:
Renninger Property
NEW HANOVER TOWNSHIP
MONTGOMERY COUNTY, PA

PREPARED FOR:
GAMBONE SWAMP PIKE, L.P.
PO BOX 287
FAIRVIEW VILLAGE, PA 19409

Rummler Associates, LLC
Landscape Architecture Land Planning Therapeutic Landscape
30 Pickwick Drive, Doylestown, PA 18901
Telephone: 215.345.4306 Fax: 215.345.4306 rummlerassociates@verizon.net

JOHN H. KENNEDY & ASSOCIATES, LLC
BOX 178, MAINLAND PA 19451-0175 215-513-1720
EMAIL: JOHNKENNEDY@LANDPLAN.COM FAX: 215-513-1721

DATE: DECEMBER 17, 2012
SCALE: NTS
SHEET: 35 OF 54

L4

Luminaire Schedule

Symbol	Label	QTY	Catalog Number	Description	Lamp	# Lamps	Lumens/Lamp	LLF	Wattage
▫	A	19		PROJECT: D770 L5 series	Metal Halide	1	16000	0.75	170

Statistics

Description	Symbol	Avg	Max	Min	Max/Min	Avg/Min	Avg/Max
Calc Zone #3	+	0.1 fc	0.9 fc	0.0 fc	N/A	N/A	0.1:1

Notes:
1. Fixture Mounted at 13'
2. Calculations Taken at Grade

2
illuminations inc.

Illuminations, Inc.
1157 Phoenixville Pike, Suite 105
West Chester, PA 19380
610-325-2220

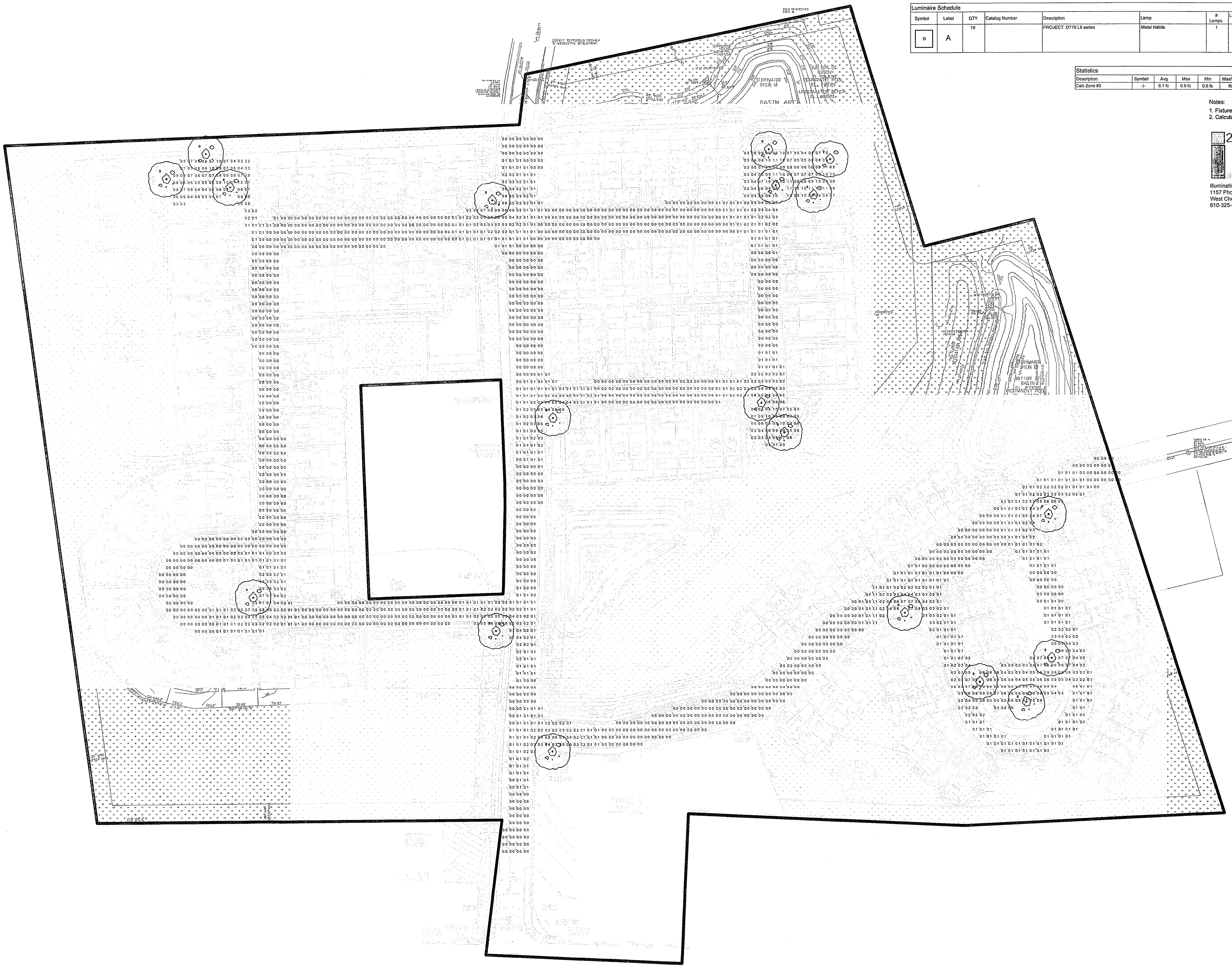

Plan View

GENERAL NOTES

NO.	REVISION/ISSUE	DATE
2	TOWN PLANNER'S COMMENTS	9/6/2013
1	TOWN PLANNER'S COMMENTS	8/22/2013

LANDSCAPE IMPROVEMENTS

LIGHTING PLAN

PENNSYLVANIA CHRISTOPH G. RUMMLER REGISTERED LANDSCAPE ARCHITECT 977-E

CHRISTOPH G. RUMMLER, RLA

PROJECT:
Renninger Property
NEW HANOVER TOWNSHIP
MONTGOMERY COUNTY, PA

PREPARED FOR:
GAMBONE SWAMP PIKE, L.P.
PO BOX 287
FAIRVIEW VILLAGE, PA 19409

Rummler Associates, LLC
Landscape Architecture Land Planning Therapeutic Landscape
38 Pickwick Drive, Doylestown, PA 18901
Telephone: 215.345.4306 Fax: 215.345.4306 rummlerassociates1@verizon.net

JOHN H. KENNEDY & ASSOCIATES, LLC
BOX 175, MAINLAND PA 19451-0175 215-513-1720
EMAIL: JOHN.KENNEDY@LANDPLAN.COM FAX: 215-513-1721

DATE: DECEMBER 17, 2012
SCALE: 1"=60'
SHEET: 36 OF 54

L5

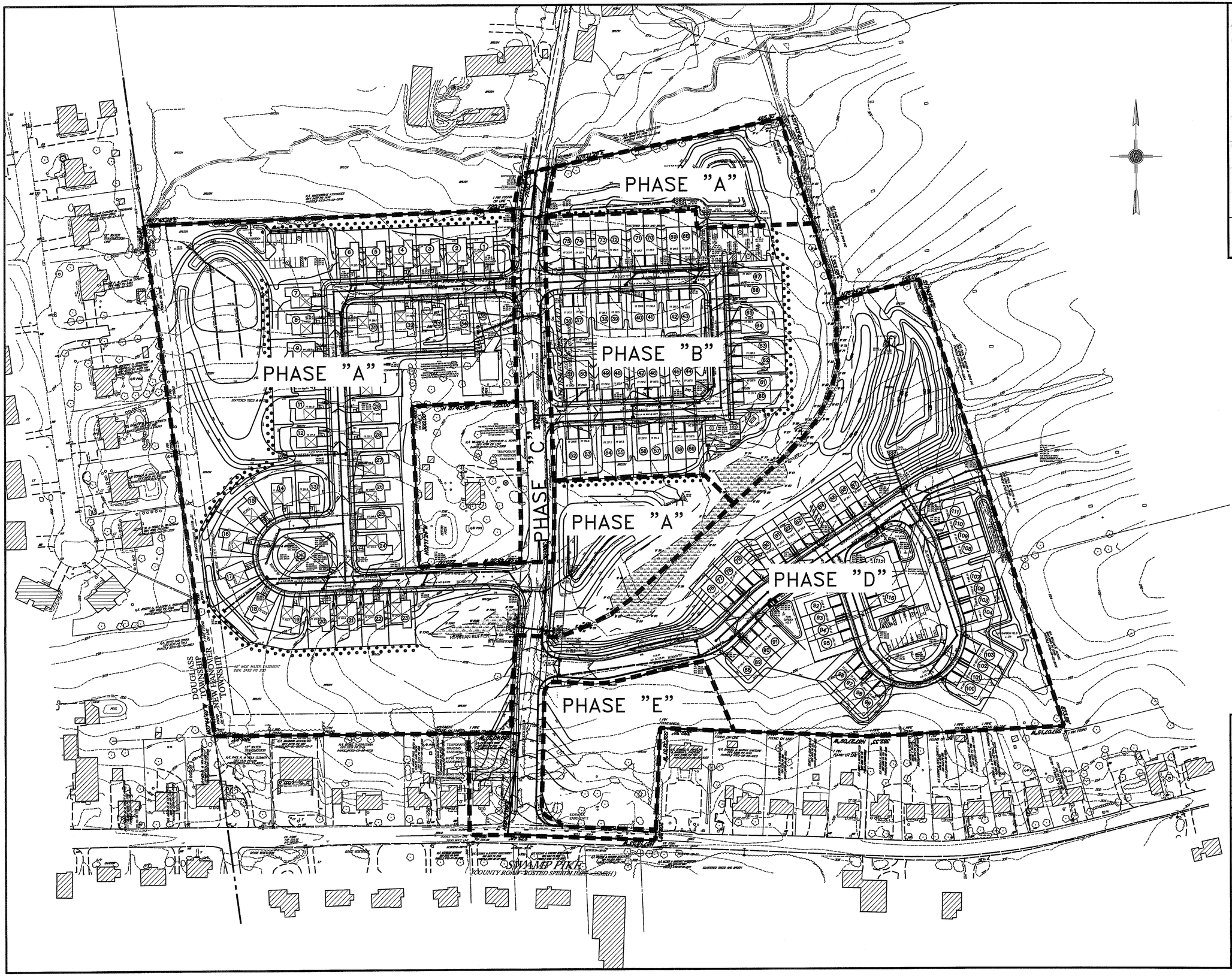

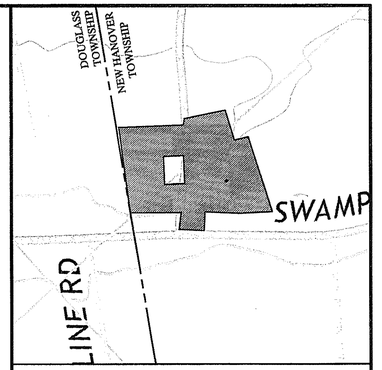

U.S.G.S. QUADRANGLE
LANSDALE
1" = 800'

"FINAL"

80 0 80 160 240

GRAPHIC SCALE

NO.	DATE	DESCRIPTION	BY
5	1/9/17	REVISED PHASE "D"	JAS
4	11/9/15	REVISED PHASE "B"	JAS
3	8/12/14	REV MIDDLE CREEK ROAD	RMC
2	9/6/13	REV. PER TWP. ENG. COMMENTS	RMC
1	8/23/13	REV. PER TWP. ENG. LETTER DATED 7/31/13	JAS

RENNINGER PROPERTY SUBDIVISION

PHASING PLAN

PREPARED FOR

GAMBONE SWAMP PIKE, L.P.

NEW HANOVER TOWNSHIP

MONTGOMERY COUNTY

PENNSYLVANIA

Chambers Associates, Inc.
Consulting Engineers and Surveyors
2962 Skippack Pike P.O. Box 678
Worcester, PA 19490-0678
484-991-8187

SCALE	DATE	JOB	DRAWING NO.
1"=80'	4-27-12	485-084	SHEET 38 of 54
MANAGER: JPH		DRAWN BY: JAS	

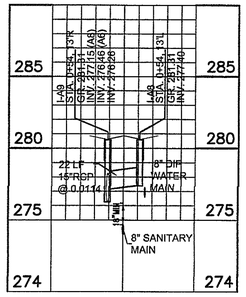

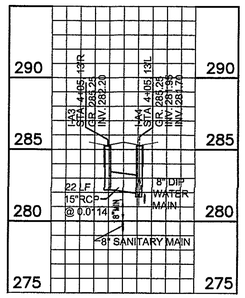

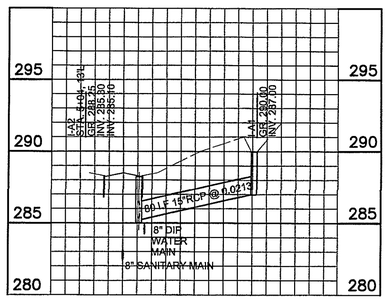

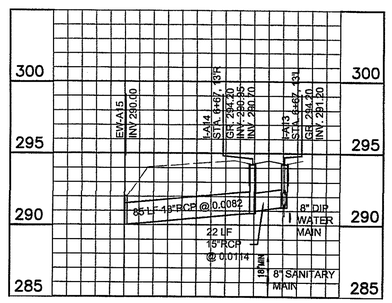

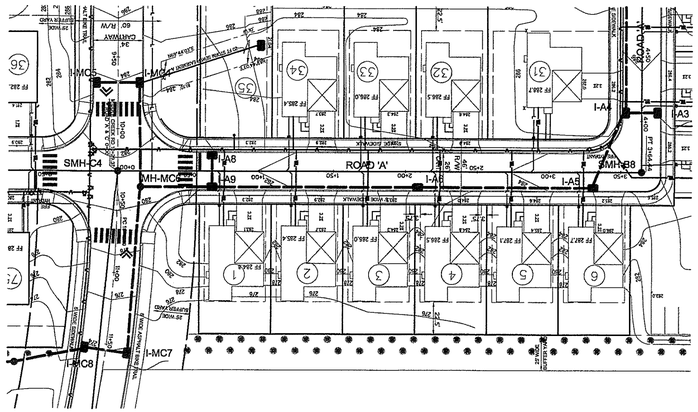

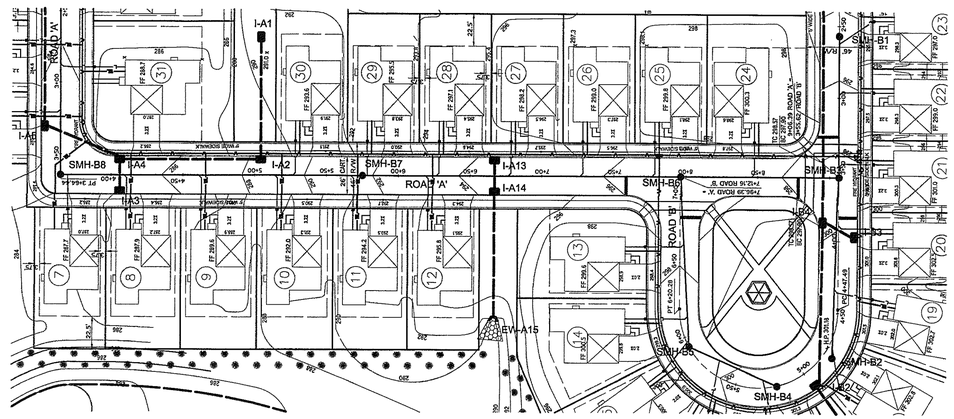

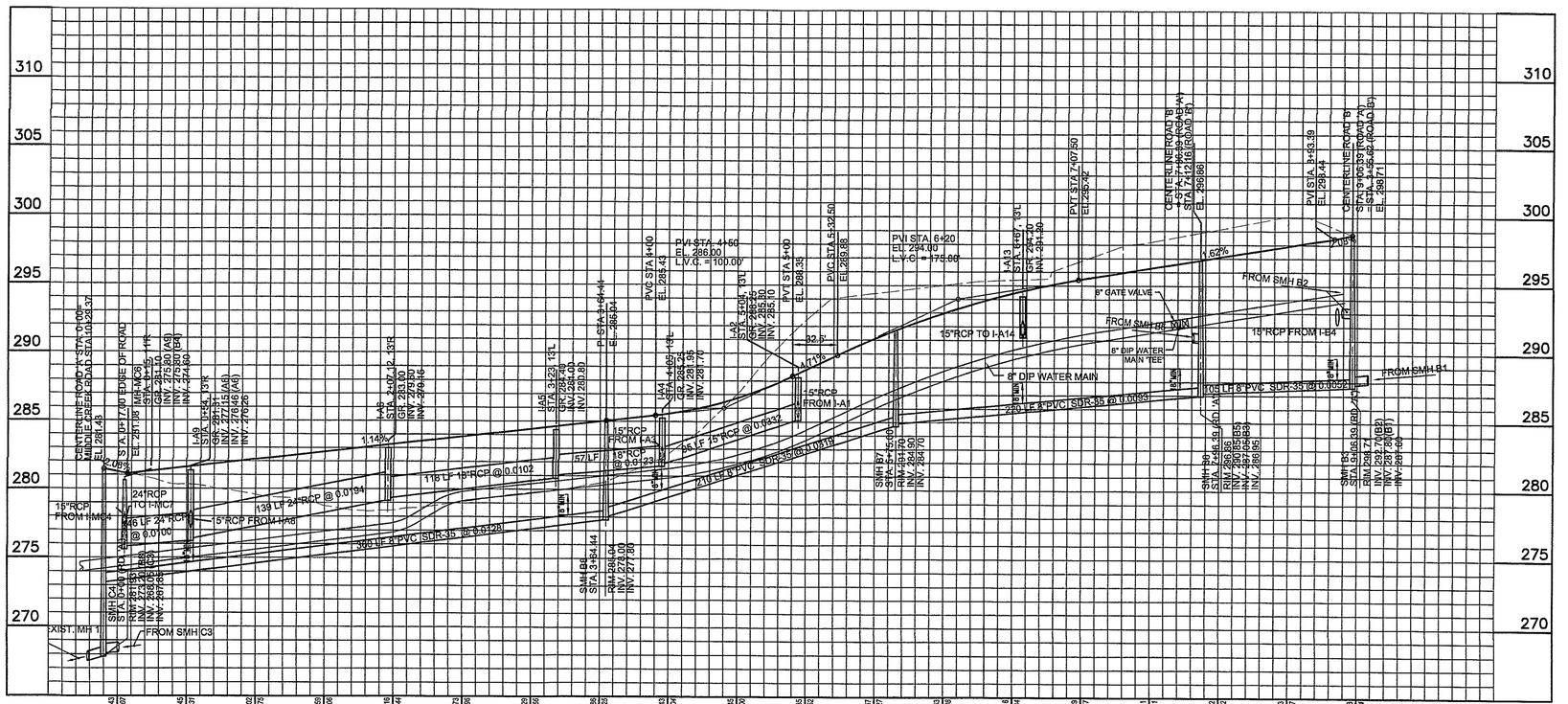

DROP MANHOLE NOTE:

1. A THERMO-PLASTIC LINER AS DESCRIBED IN N.H.T.A. STANDARD SPECIFICATIONS IS REQUIRED. THIS IS ALSO REQUIRED ON THE FIRST MANHOLE LOCATED DOWNSTREAM OF THE DROP MANHOLE.
2. LINERS CAN BE FIELD APPLIED TO EXISTING MANHOLES OR A PAINT-ON LINER *(SUCH AS THE PARSONPOXY SEL-80 PRODUCT OR AN ACCEPTABLE EQUIVALENT)* CAN BE APPLIED.

LEGEND

SYMBOL	DESCRIPTION
o	EXISTING IRON PIN (UNLESS OTHERWISE NOTED)
	EXISTING GRADE
	PROPOSED GRADE
	EXISTING STORM SEWER
	PROPOSED STORM SEWER
	EXISTING SANITARY SEWER
	PROPOSED SANITARY SEWER
W W	EXISTING WATER LINE
E E	EXISTING ELECTRIC LINE
OE OE	EXISTING OVERHEAD ELECTRIC LINE
G G	EXISTING GAS LINE
T T	EXISTING TELEPHONE LINE
W W	PROPOSED WATER SERVICE
WL WL	PROPOSED WATER SERVICE LATERAL
L L	EXISTING SANITARY SEWER LATERAL
L L	PROPSED SANITARY SEWER LATERAL

"FINAL"

50 0 50 100 150
GRAPHIC SCALE

COPYRIGHT

CHAMBERS ASSOCIATES, INC., CIVIL ENGINEERS & SURVEYORS, EXPRESSLY RESERVES ITS COMMON LAW COPYRIGHT AND ALL OTHER PROPRIETARY RIGHTS IN THESE PLANS. ALL DRAWINGS, SPECIFICATIONS, AND COPIES THEREOF ARE AND SHALL REMAIN THE PROPERTY OF CHAMBERS ASSOCIATES, INC. THEY ARE TO BE USED ONLY WITH RESPECT TO THIS PROJECT AND ARE NEITHER TO BE USED ON ANY OTHER PROJECT, NOR ARE THEY TO BE ASSIGNED TO ANY THIRD PARTY WITHOUT FIRST OBTAINING THE EXPRESS WRITTEN PERMISSION AND CONSENT OF CHAMBERS ASSOCIATES, INC. ANY RE-USE WITHOUT WRITTEN PERMISSION, VERIFICATION, CONSENT, OR ADAPTATION BY CHAMBERS ASSOCIATES, INC. FOR THE SPECIFIC PURPOSE INTENDED, WILL BE AT THE THIRD PARTY'S SOLE RISK AND WITHOUT LIABILITY OR LEGAL EXPOSURE TO CHAMBERS ASSOCIATES, INC. THE THIRD PARTY SHALL FURTHER INDEMNIFY AND HOLD HARMLESS CHAMBERS ASSOCIATES, INC. FROM ALL CLAIMS, DAMAGES, LOSSES AND EXPENSES ARISING THERETO OR RESULTING THEREFROM.

NO.	DATE	DESCRIPTION	BY
8	1/8/17	REVISED PHASE "D"	JAS
7	11/9/15	REVISED PHASE "B"	JAS
6	8/12/14	REV. MIDDLE CREEK ROAD	RMC
5	9/6/13	REV. PER TWP. ENG. COMMENTS	RMC
4	8/23/13	REV. PER TWP. ENG. LETTERS DATED 7/31/13	RMC
3	6/24/13	REV. PER TWP. ENG. LETTERS DATED 1/3/13, 2/7/13	JAS
2	5/8/13	REV. AS PER NPDES MINOR REVISION	JAS
1	11/30/12	REV. PER TWP. ENG. LETTER DATED 6/8/12	RMC

RENNINGER TRACT

PLAN AND PROFILE ROAD 'A'

PREPARED FOR

GAMBONE SWAMP PIKE, L.P.

NEW HANOVER TOWNSHIP

MONTGOMERY COUNTY

PENNSYLVANIA

Chambers Associates, Inc.
Consulting Engineers and Surveyors
2962 Skippack Pike P.O. Box 678
Worcester, PA 19490-0678
484-991-8187

SCALE	DATE	JOB	DRAWING NO.
1"= 50' H 1"= 5' V	4-27-12	485-084	SHEET 39 of 54
MANAGER: JPH		DRAWN BY: RMC	

I:\Projects\485-084\Engineering\Submissions\Submission SET OF PLANS 1-9-17\DWG\TS 39-44.dwg, TS Road A, 1/11/2017 11:47:03 AM, Thomas Schmidt

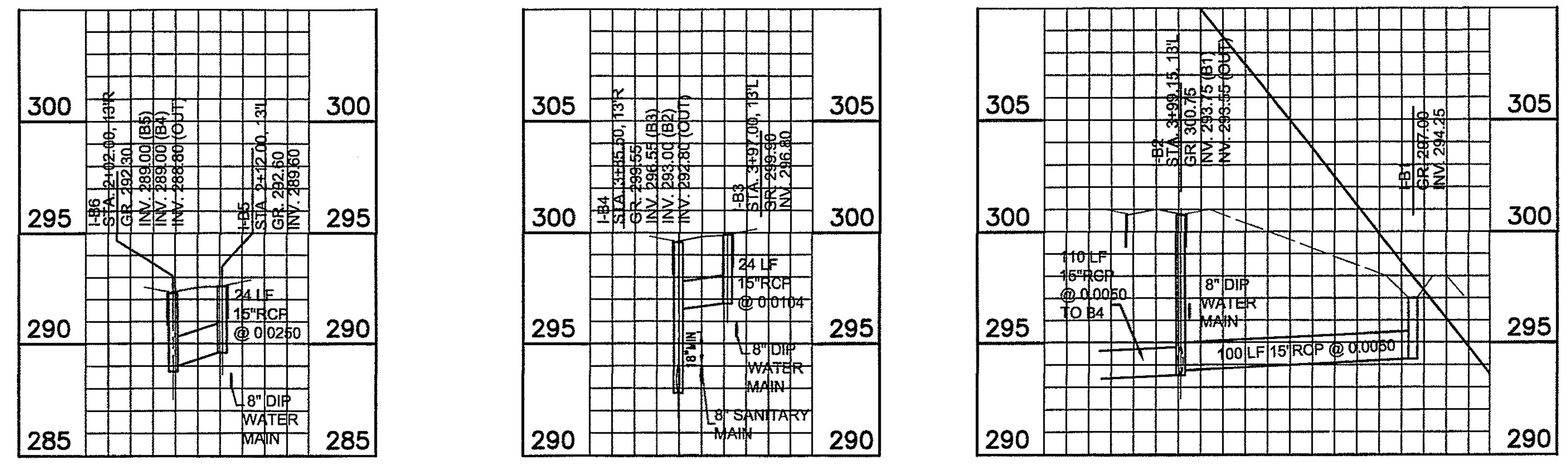

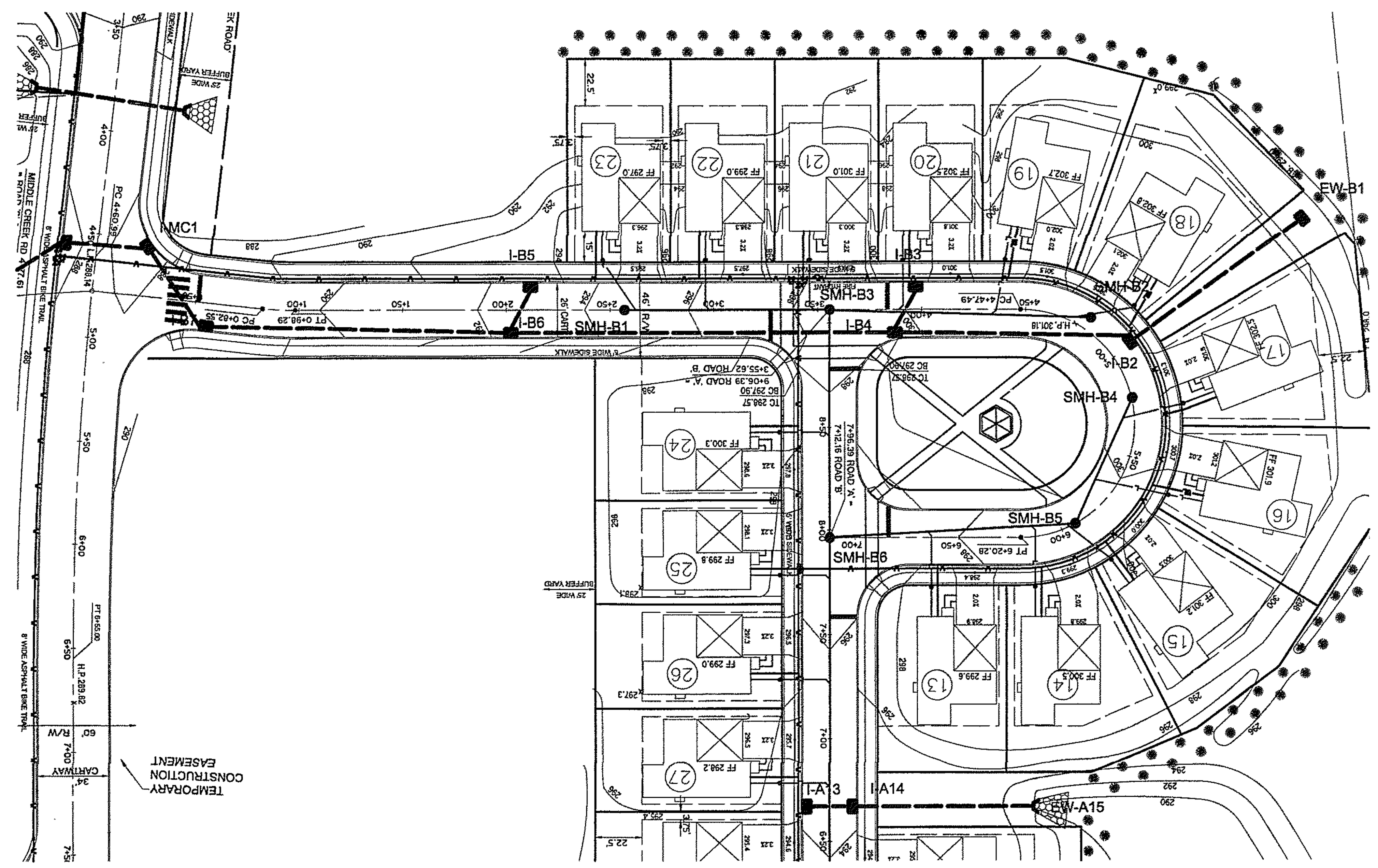

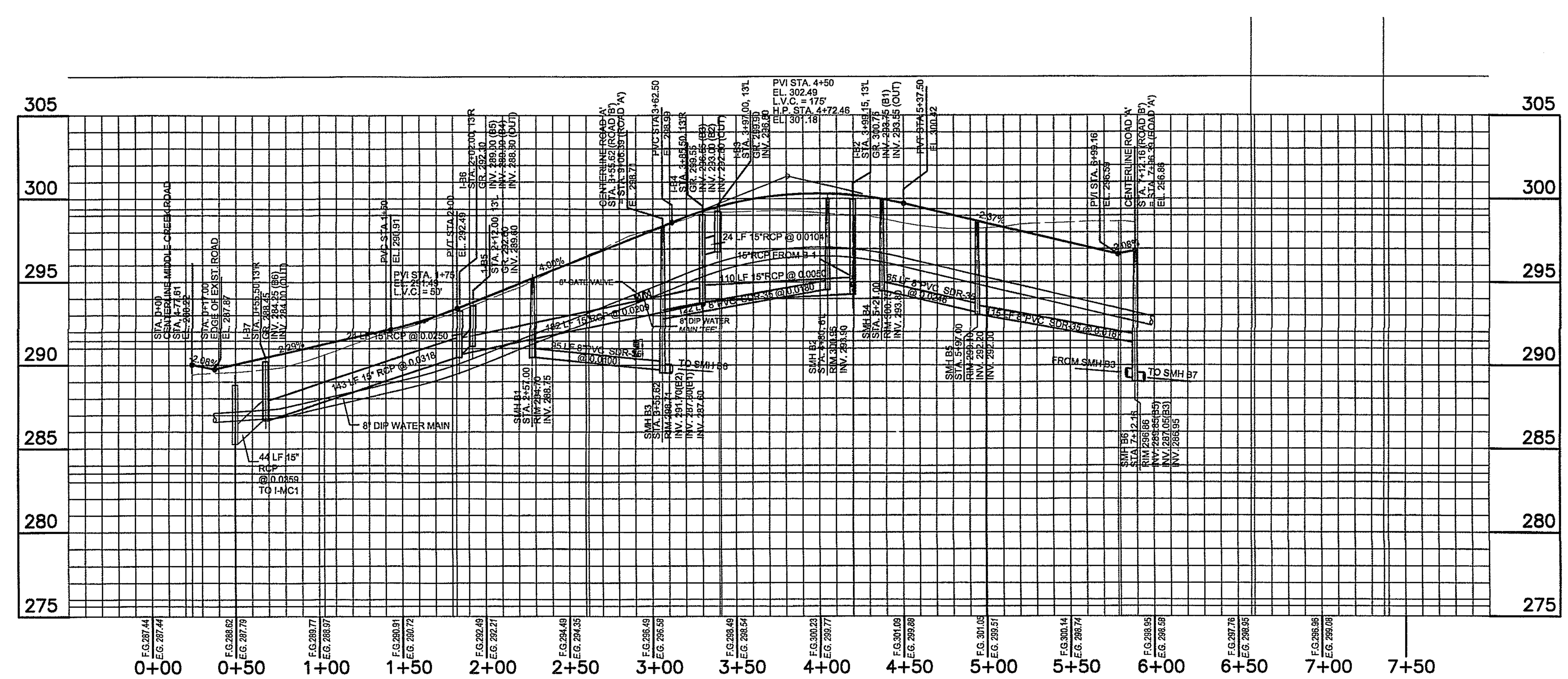

DROP MANHOLE NOTE:

1. A THERMO-PLASTIC LINER AS DESCRIBED IN N.H.T.A. STANDARD SPECIFICATIONS IS REQUIRED. THIS IS ALSO REQUIRED ON THE FIRST MANHOLE LOCATED DOWNSTREAM OF THE DROP MANHOLE.
2. LINERS CAN BE FIELD APPLIED TO EXISTING MANHOLES OR A PAINT-ON LINER (SUCH AS THE PARSONPOXY SEL-80 PRODUCT OR AN ACCEPTABLE EQUIVALENT) CAN BE APPLIED.

LEGEND

SYMBOL	DESCRIPTION
o	EXISTING IRON PIN (UNLESS OTHERWISE NOTED)
— — —	EXISTING GRADE
———	PROPOSED GRADE
	EXISTING STORM SEWER
	PROPOSED STORM SEWER
	EXISTING SANITARY SEWER
	PROPOSED SANITARY SEWER
—W—W—	EXISTING WATER LINE
—E—E—	EXISTING ELECTRIC LINE
—OE—OE—	EXISTING OVERHEAD ELECTRIC LINE
—G—G—	EXISTING GAS LINE
—T—T—	EXISTING TELEPHONE LINE
—W—W—	PROPOSED WATER SERVICE
—WL—WL—	PROPOSED WATER SERVICE LATERAL
—L—L—	EXISTING SANITARY SEWER LATERAL
—L—L—	PROPSED SANITARY SEWER LATERAL

"FINAL"

50 0 50 100 150

GRAPHIC SCALE

COPYRIGHT

CHAMBERS ASSOCIATES, INC., CIVIL ENGINEERS & SURVEYORS, EXPRESSLY RESERVES ITS COMMON LAW COPYRIGHT AND ALL OTHER PROPRIETARY RIGHTS IN THESE PLANS. ALL DRAWINGS, SPECIFICATIONS, AND COPIES THEREOF ARE AND SHALL REMAIN THE PROPERTY OF CHAMBERS ASSOCIATES, INC. THEY ARE TO BE USED ONLY WITH RESPECT TO THIS PROJECT AND ARE NEITHER TO BE USED ON ANY OTHER PROJECT, NOR ARE THEY TO BE ASSIGNED TO ANY THIRD PARTY WITHOUT FIRST OBTAINING THE EXPRESS WRITTEN PERMISSION AND CONSENT OF CHAMBERS ASSOCIATES, INC. ANY RE-USE WITHOUT WRITTEN PERMISSION, VERIFICATION, CONSENT, OR ADAPTATION BY CHAMBERS ASSOCIATES, INC. FOR THE SPECIFIC PURPOSE INTENDED, WILL BE AT THE THIRD PARTY'S SOLE RISK AND WITHOUT LIABILITY OR LEGAL EXPOSURE TO CHAMBERS ASSOCIATES, INC. THE THIRD PARTY SHALL FURTHER INDEMNIFY AND HOLD HARMLESS CHAMBERS ASSOCIATES, INC. FROM ALL CLAIMS, DAMAGES, LOSSES AND EXPENSES ARISING THERETO OR RESULTING THEREFROM.

NO.	DATE	DESCRIPTION	BY
8	1/9/17	REVISED PHASE "D"	JAS
7	11/9/15	REVISED PHASE "B"	JAS
6	8/12/14	REV. MIDDLE CREEK ROAD	RMC
5	9/6/13	REV. PER TWP. ENG. COMMENTS	RMC
4	8/23/13	REV. PER TWP. ENG. LETTERS DATED 7/31/13	RMC
3	6/24/13	REV. PER TWP. ENG. LETTERS DATED 1/3/13, 2/7/13	JAS
2	5/6/13	REV. AS PER NPDES MINOR REVISION	JAS
1	11/30/12	REV. PER TWP. ENG. LETTER DATED 6/6/12	RMC

RENNINGER TRACT

PLAN AND PROFILE ROAD 'B'

PREPARED FOR

GAMBONE SWAMP PIKE, L.P.

NEW HANOVER TOWNSHIP

MONTGOMERY COUNTY

PENNSYLVANIA

Chambers Associates, Inc.
Consulting Engineers and Surveyors
2962 Skippack Pike P.O. Box 678
Worcester, PA 19490-0678
484-991-8187

SCALE	DATE	JOB	DRAWING NO.	
1"= 50' H 1"= 5' V	4-27-12	485-084	SHEET	40 of 54
MANAGER:	JPH		DRAWN BY:	RMC

L:\Projects\48508419-Submissions\SUBMISSION SET OF PLANS 1-9-17\SHEETS 39-44.dwg, 40 Road B, 1/10/2017 11:47:22 AM, RICOH MP CW2200 PS

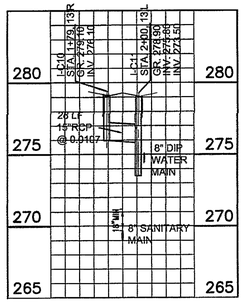

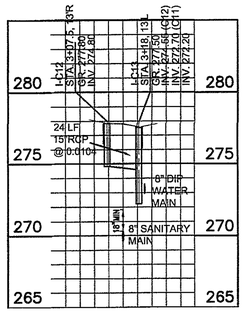

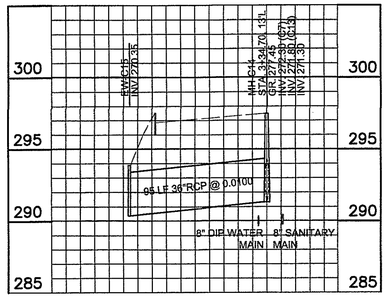

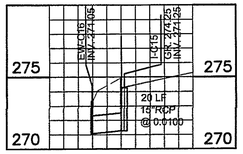

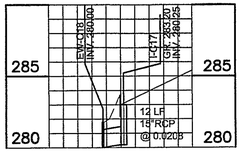

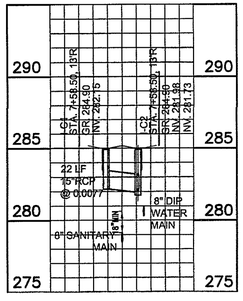

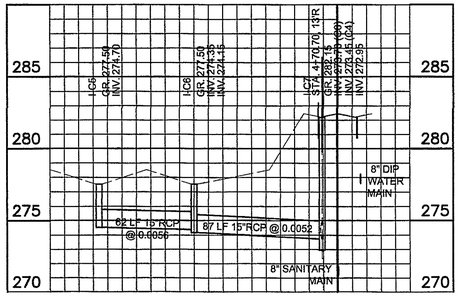

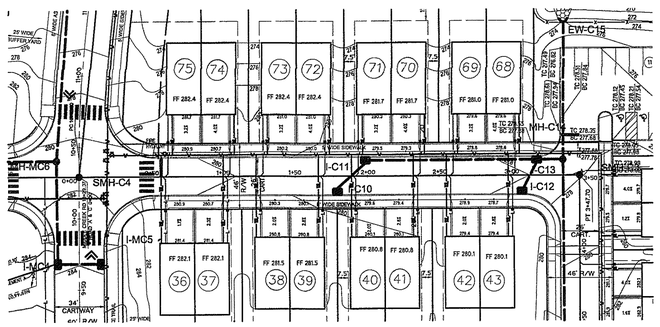

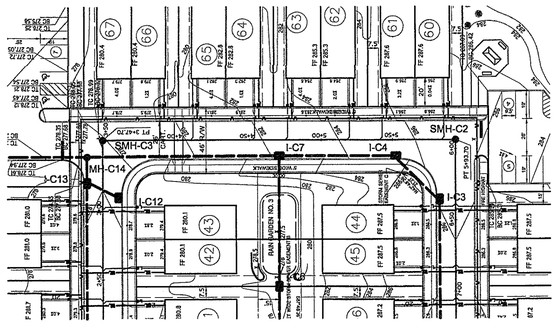

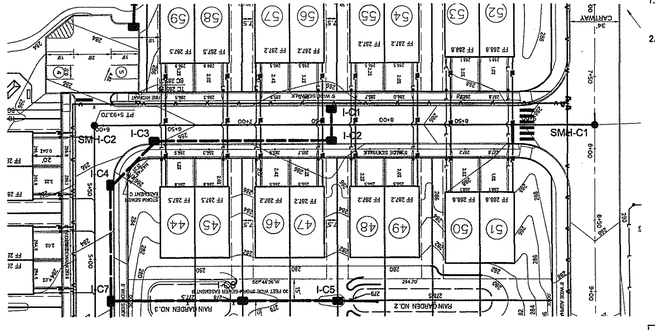

DROP MANHOLE NOTE:

1. A THERMO-PLASTIC LINER AS DESCRIBED IN N.H.T.A. STANDARD SPECIFICATIONS IS REQUIRED. THIS IS ALSO REQUIRED ON THE FIRST MANHOLE LOCATED DOWNSTREAM OF THE DROP MANHOLE.
2. LINERS CAN BE FIELD APPLIED TO EXISTING MANHOLES OR A PAINT-ON LINER (SUCH AS THE PARSONPOXY SEL-80 PRODUCT OR AN ACCEPTABLE EQUIVALENT) CAN BE APPLIED.

LEGEND

SYMBOL	DESCRIPTION
o	EXISTING IRON PIN (UNLESS OTHERWISE NOTED)
	EXISTING GRADE
	PROPOSED GRADE
	EXISTING STORM SEWER
	PROPOSED STORM SEWER
	EXISTING SANITARY SEWER
	PROPOSED SANITARY SEWER
W	EXISTING WATER LINE
E	EXISTING ELECTRIC LINE
OE	EXISTING OVERHEAD ELECTRIC LINE
G	EXISTING GAS LINE
T	EXISTING TELEPHONE LINE
W	PROPOSED WATER SERVICE
WL	PROPOSED WATER SERVICE LATERAL
L	EXISTING SANITARY SEWER LATERAL
L	PROPSED SANITARY SEWER LATERAL

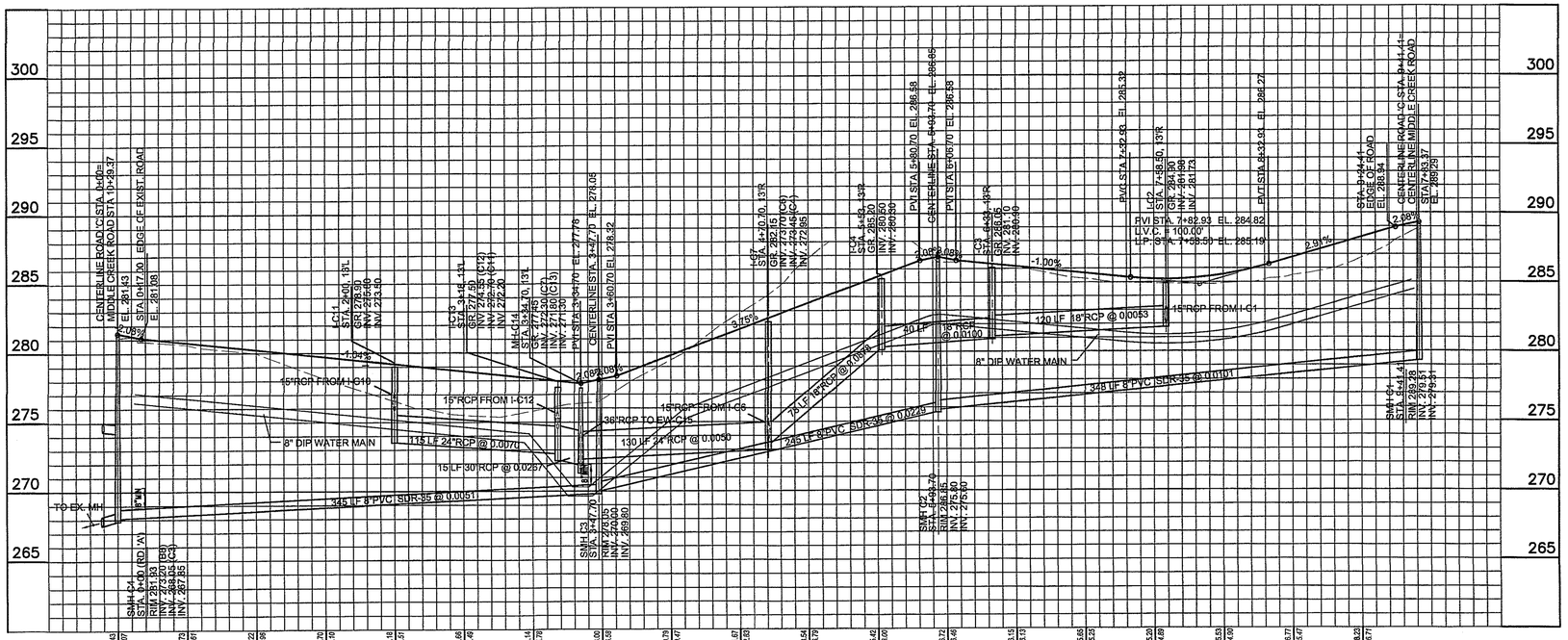

"FINAL"

50 0 50 100 150

GRAPHIC SCALE

COPYRIGHT

CHAMBERS ASSOCIATES, INC., CIVIL ENGINEERS & SURVEYORS, EXPRESSLY RESERVES ITS COMMON LAW COPYRIGHT AND ALL OTHER PROPRIETARY RIGHTS IN THESE PLANS. ALL DRAWINGS, SPECIFICATIONS, AND COPIES THEREOF ARE AND SHALL REMAIN THE PROPERTY OF CHAMBERS ASSOCIATES, INC. THEY ARE TO BE USED ONLY WITH RESPECT TO THIS PROJECT AND ARE NEITHER TO BE USED ON ANY OTHER PROJECT, NOR ARE THEY TO BE ASSIGNED TO ANY THIRD PARTY WITHOUT FIRST OBTAINING THE EXPRESS WRITTEN PERMISSION AND CONSENT OF CHAMBERS ASSOCIATES, INC. ANY RE-USE WITHOUT WRITTEN PERMISSION, VERIFICATION, CONSENT, OR ADAPTATION BY CHAMBERS ASSOCIATES, INC. FOR THE SPECIFIC PURPOSE INTENDED, WILL BE AT THE THIRD PARTY'S SOLE RISK AND WITHOUT LIABILITY OR LEGAL EXPOSURE TO CHAMBERS ASSOCIATES, INC. THE THIRD PARTY SHALL FURTHER INDEMNIFY AND HOLD HARMLESS CHAMBERS ASSOCIATES, INC. FROM ALL CLAIMS, DAMAGES, LOSSES AND EXPENSES ARISING THERETO OR RESULTING THEREFROM.

NO.	DATE	DESCRIPTION	BY
9	1/8/17	REVISED PHASE "D"	JAS
8	12/18/15	REVISED PHASE "B"	JAS
7	11/9/15	REVISED PHASE "B"	JAS
6	8/12/14	REV. MIDDLE CREEK ROAD	RMC
5	9/6/13	REV. PER. TWP. ENG. COMMENTS	RMC
4	8/23/13	REV. PER TWP. ENG. LETTERS DATED 7/31/13	RMC
3	6/24/13	REV. PER TWP. ENG. LETTERS DATED 1/3/13, 2/7/13	JAS
2	5/8/13	REV. AS PER NPDES MINOR REVISION	JAS
1	11/30/12	REV. PER TWP. ENG. LETTER DATED 6/6/12	RMC

RENNINGER TRACT

PLAN AND PROFILE ROAD 'C'

PREPARED FOR

GAMBONE SWAMP PIKE, L.P.

NEW HANOVER TOWNSHIP

MONTGOMERY COUNTY

PENNSYLVANIA

Chambers Associates, Inc.
Consulting Engineers and Surveyors
2962 Skippack Pike P.O. Box 678
Worcester, PA 19490-0678
484-991-8187

SCALE	DATE	JOB	DRAWING NO.
1"= 50' H 1"= 5' V	4-27-12	485-084	SHEET 41 of 54
MANAGER: JPH		DRAWN BY:	RMC

S:\Chambers\485084\Submissions\SUBDIVISION SET OF PLANS 1-9-17\SHEETS 39-44.dwg, 41 Road C, 1/3/2017 11:47:56 AM, Adobe PDF Chambers

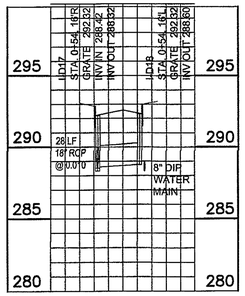

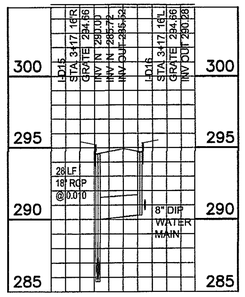

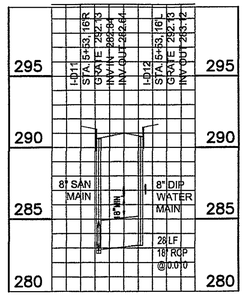

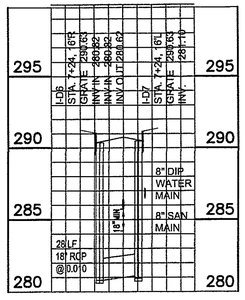

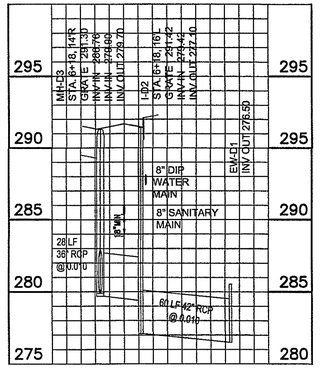

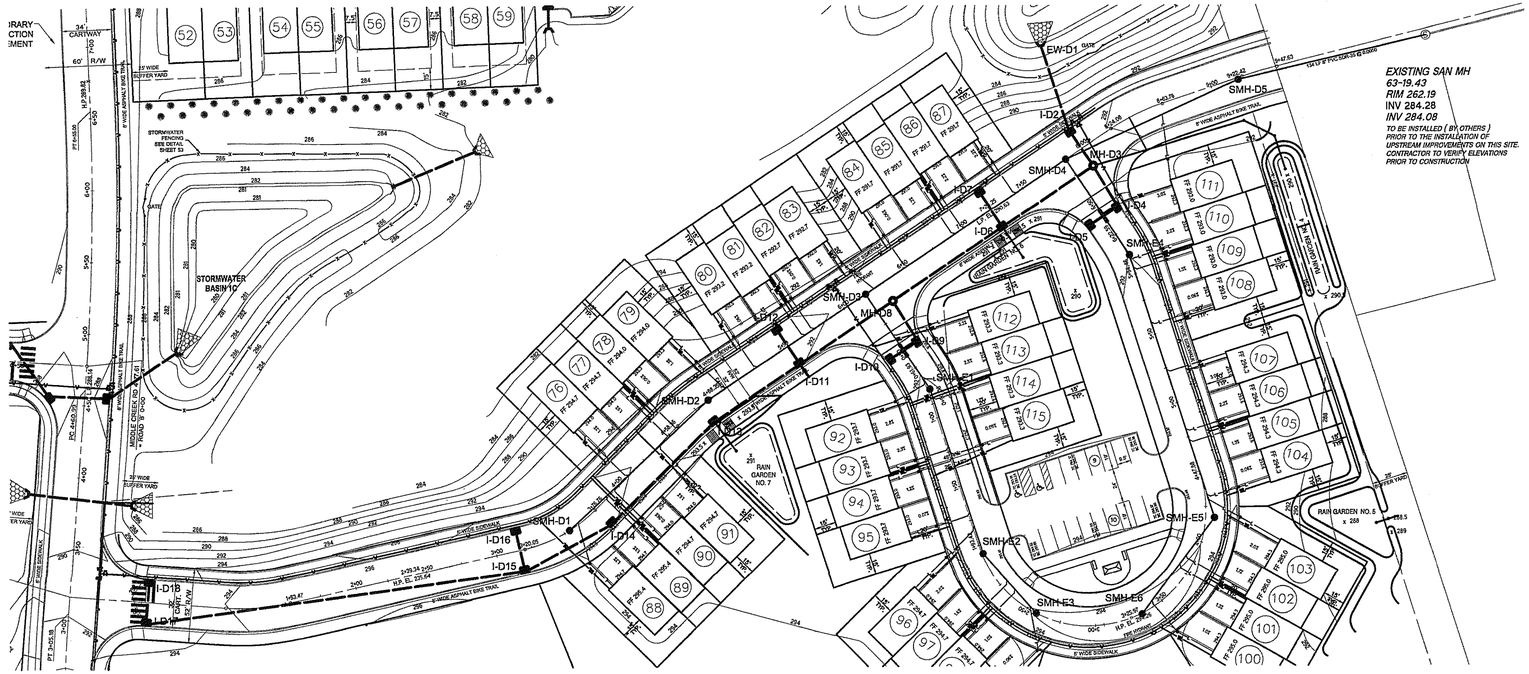

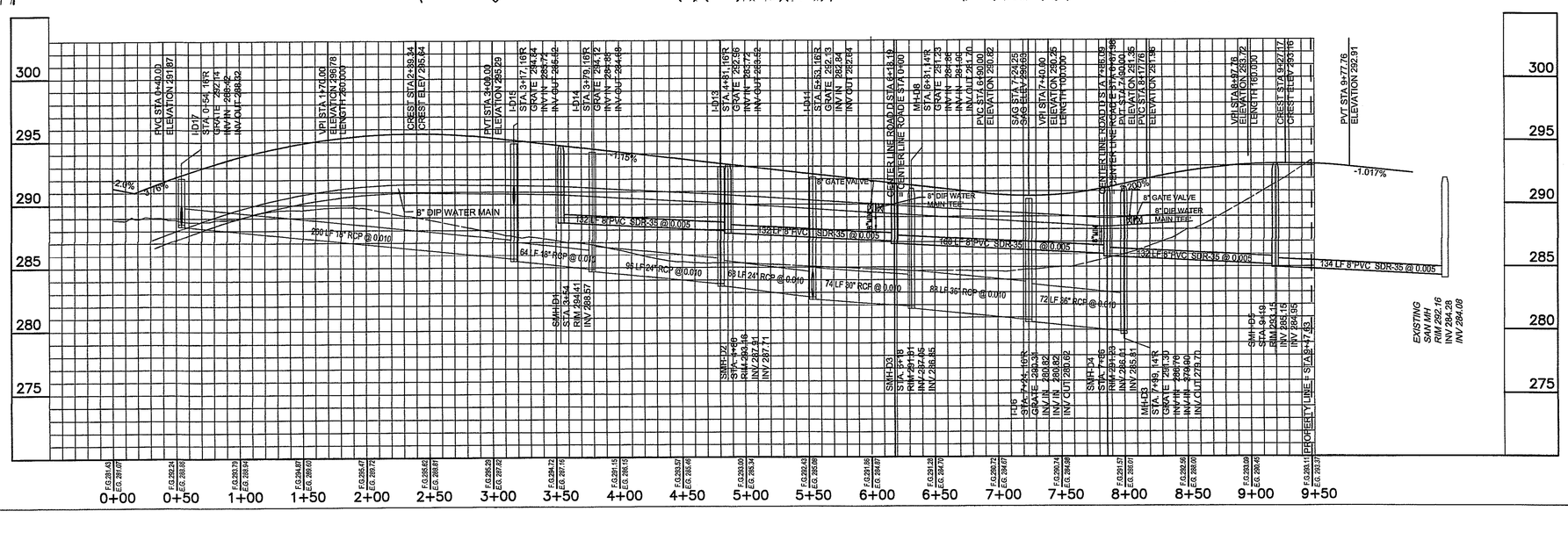

DROP MANHOLE NOTE:

1. A THERMO-PLASTIC LINER AS DESCRIBED IN N.H.T.A. STANDARD SPECIFICATIONS IS REQUIRED. THIS IS ALSO REQUIRED ON THE FIRST MANHOLE LOCATED DOWNSTREAM OF THE DROP MANHOLE.
2. LINERS CAN BE FIELD APPLIED TO EXISTING MANHOLES OR A PAINT-ON LINER (SUCH AS THE PARSONPOXY SEL-80 PRODUCT OR AN ACCEPTABLE EQUIVALENT) CAN BE APPLIED.

CONNECTION NOTE:

3. CONNECTIONS TO EXISTING MANHOLES SHOULD BE MADE BY CUTTING REQUIRED OPENING BY SUCH METHODS SO AS TO PREVENT CRACKING OR SPALLING. OPENING SHOULD BE OF SUFFICIENT SIZE TO ACCOMMODATE PIPE WITH A LINK SEAL MODULAR PENETRATION SEAL AS APPROVED BY N.H.T.A.
4. NEW CONSTRUCTION 'BY OTHERS' SHOULD INSTALL A 5 FEET LONG 8 INCH DIAMETER PVC SDR-35 STUB AT THE REQUIRED SLOPE FOR FUTURE CONNECTIONS.

LEGEND

SYMBOL	DESCRIPTION
○	EXISTING IRON PIN (UNLESS OTHERWISE NOTED)
	EXISTING GRADE
	PROPOSED GRADE
	EXISTING STORM SEWER
	PROPOSED STORM SEWER
	EXISTING SANITARY SEWER
	PROPOSED SANITARY SEWER
W W	EXISTING WATER LINE
E E	EXISTING ELECTRIC LINE
OE OE	EXISTING OVERHEAD ELECTRIC LINE
G G	EXISTING GAS LINE
T T	EXISTING TELEPHONE LINE
W W	PROPOSED WATER SERVICE
WL WL	PROPOSED WATER SERVICE LATERAL
L L	EXISTING SANITARY SEWER LATERAL
L L	PROPSED SANITARY SEWER LATERAL

"FINAL"

50 0 50 100 150

GRAPHIC SCALE

COPYRIGHT

CHAMBERS ASSOCIATES, INC., CIVIL ENGINEERS & SURVEYORS, EXPRESSLY RESERVES ITS COMMON LAW COPYRIGHT AND ALL OTHER PROPRIETARY RIGHTS IN THESE PLANS. ALL DRAWINGS, SPECIFICATIONS, AND COPIES THEREOF ARE AND SHALL REMAIN THE PROPERTY OF CHAMBERS ASSOCIATES, INC. THEY ARE TO BE USED ONLY WITH RESPECT TO THIS PROJECT AND ARE NEITHER TO BE USED ON ANY OTHER PROJECT, NOR ARE THEY TO BE ASSIGNED TO ANY THIRD PARTY WITHOUT FIRST OBTAINING THE EXPRESS WRITTEN PERMISSION AND CONSENT OF CHAMBERS ASSOCIATES, INC. ANY RE-USE WITHOUT WRITTEN PERMISSION, VERIFICATION, CONSENT, OR ADAPTATION BY CHAMBERS ASSOCIATES, INC. FOR THE SPECIFIC PURPOSE INTENDED, WILL BE AT THE THIRD PARTY'S SOLE RISK AND WITHOUT LIABILITY OR LEGAL EXPOSURE TO CHAMBERS ASSOCIATES, INC. THE THIRD PARTY SHALL FURTHER INDEMNIFY AND HOLD HARMLESS CHAMBERS ASSOCIATES, INC. FROM ALL CLAIMS, DAMAGES, LOSSES AND EXPENSES ARISING THERETO OR RESULTING THEREFROM.

NO.	DATE	DESCRIPTION	BY
8	1/9/17	REVISED PHASE "D"	JAS
7	11/9/15	REVISED PHASE "B"	JAS
6	8/12/14	REV. MIDDLE CREEK ROAD	RMC
5	9/8/13	REV. PER TWP. ENG. COMMENTS	RMC
4	8/23/13	REV. PER TWP. ENG. LETTERS DATED 7/31/13	RMC
3	6/24/13	REV. PER TWP. ENG. LETTERS DATED 1/3/13, 2/7/13	JAS
2	5/8/13	REV. AS PER NPDES MINOR REVISION	JAS
1	11/30/12	REV. PER TWP. ENG. LETTER DATED 6/8/12	RMC

RENNINGER TRACT

PLAN AND PROFILE ROAD 'D'

PREPARED FOR

GAMBONE SWAMP PIKE, L.P.

NEW HANOVER TOWNSHIP

MONTGOMERY COUNTY

PENNSYLVANIA

Chambers Associates, Inc.
Consulting Engineers and Surveyors
2962 Skippack Pike P.O. Box 678
Worcester, PA 19490-0678
484-991-8187

SCALE	DATE	JOB	DRAWING NO.
1"= 50' H 1"= 5' V	4-27-12	485-084	SHEET 42 of 54
MANAGER: JPH		DRAWN BY: RMC	

L:\Projects\485084\3 Submissions\Subdivision SET OF PLANS 3-15-17\SHEETS 34-44.dwg, 42 Road D, 1/17/2017 11:17:53 AM, ROGER MICHAELS

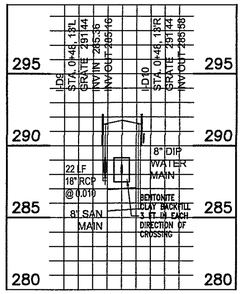

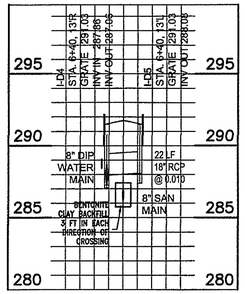

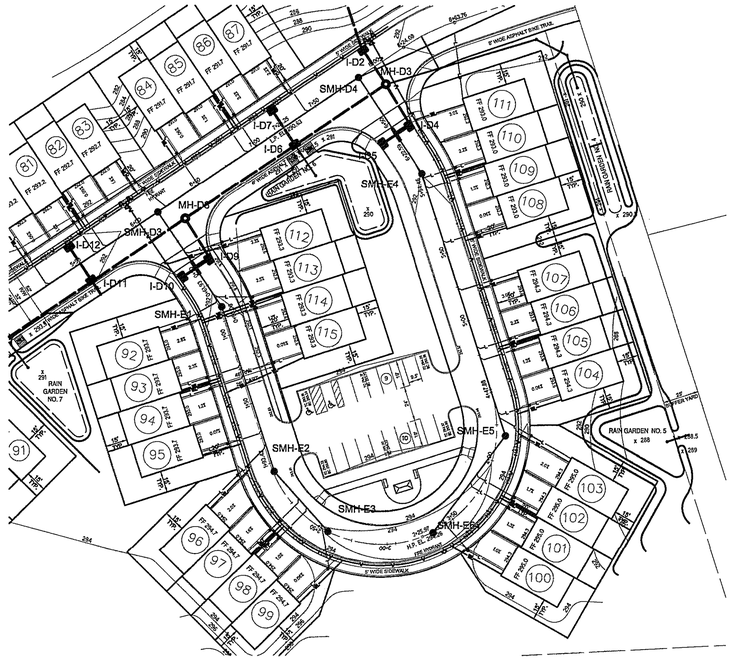

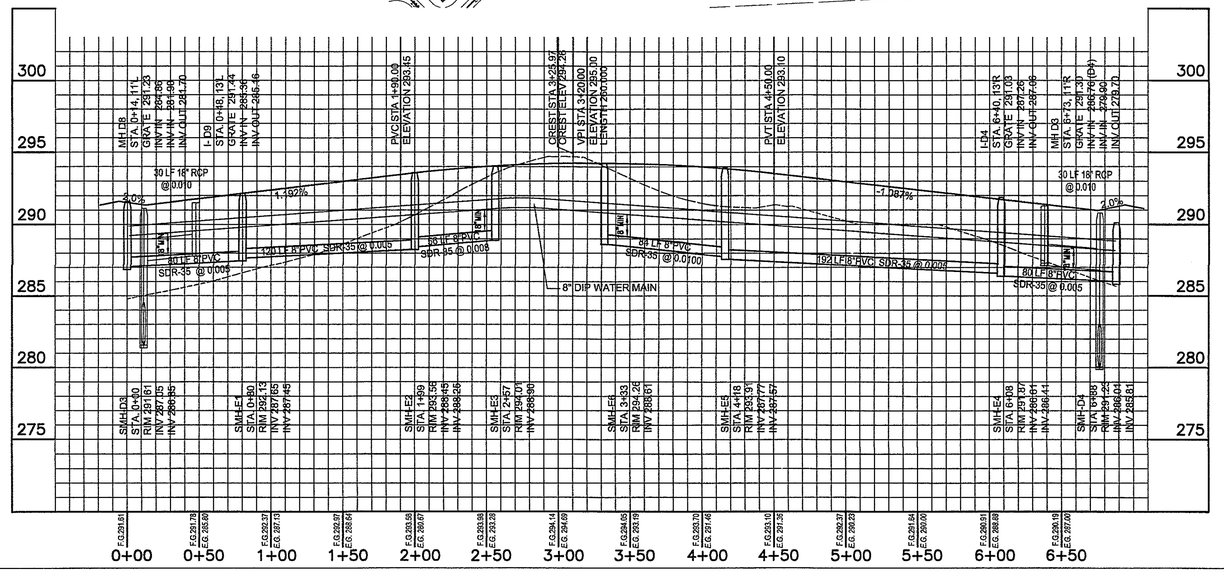

DROP MANHOLE NOTE:

1. A THERMO-PLASTIC LINER AS DESCRIBED IN N.H.T.A. STANDARD SPECIFICATIONS IS REQUIRED. THIS IS ALSO REQUIRED ON THE FIRST MANHOLE LOCATED DOWNSTREAM OF THE DROP MANHOLE.
2. LINERS CAN BE FIELD APPLIED TO EXISTING MANHOLES OR A PAINT-ON LINER (SUCH AS THE PARSONPOXY SEL-80 PRODUCT OR AN ACCEPTABLE EQUIVALENT) CAN BE APPLIED.

LEGEND	
SYMBOL	DESCRIPTION
○	EXISTING IRON PIN (UNLESS OTHERWISE NOTED)
	EXISTING GRADE
	PROPOSED GRADE
	EXISTING STORM SEWER
	PROPOSED STORM SEWER
	EXISTING SANITARY SEWER
	PROPOSED SANITARY SEWER
W W	EXISTING WATER LINE
E E	EXISTING ELECTRIC LINE
OE OE	EXISTING OVERHEAD ELECTRIC LINE
G G	EXISTING GAS LINE
T T	EXISTING TELEPHONE LINE
W W	PROPOSED WATER SERVICE
WL WL	PROPOSED WATER SERVICE LATERAL
L L	EXISTING SANITARY SEWER LATERAL
L L	PROPSED SANITARY SEWER LATERAL

"FINAL"

50 0 50 100 150

GRAPHIC SCALE

COPYRIGHT

CHAMBERS ASSOCIATES, INC., CIVIL ENGINEERS & SURVEYORS, EXPRESSLY RESERVES ITS COMMON LAW COPYRIGHT AND ALL OTHER PROPRIETARY RIGHTS IN THESE PLANS. ALL DRAWINGS, SPECIFICATIONS, AND COPIES THEREOF ARE AND SHALL REMAIN THE PROPERTY OF CHAMBERS ASSOCIATES, INC. THEY ARE TO BE USED ONLY WITH RESPECT TO THIS PROJECT AND ARE NEITHER TO BE USED ON ANY OTHER PROJECT, NOR ARE THEY TO BE ASSIGNED TO ANY THIRD PARTY WITHOUT FIRST OBTAINING THE EXPRESS WRITTEN PERMISSION AND CONSENT OF CHAMBERS ASSOCIATES, INC. ANY RE-USE WITHOUT WRITTEN PERMISSION, VERIFICATION, CONSENT, OR ADAPTATION BY CHAMBERS ASSOCIATES, INC. FOR THE SPECIFIC PURPOSE INTENDED, WILL BE AT THE THIRD PARTY'S SOLE RISK AND WITHOUT LIABILITY OR LEGAL EXPOSURE TO CHAMBERS ASSOCIATES, INC. THE THIRD PARTY SHALL FURTHER INDEMNIFY AND HOLD HARMLESS CHAMBERS ASSOCIATES, INC. FROM ALL CLAIMS, DAMAGES, LOSSES AND EXPENSES ARISING THERETO OR RESULTING THEREFROM.

NO.	DATE	DESCRIPTION	BY
8	1/9/17	REVISED PHASE "D"	JAS
7	11/9/15	REVISED PHASE "B"	JAS
6	8/12/14	REV. MIDDLE CREEK ROAD	RMC
5	9/6/13	REV. PER TWP. ENG. COMMENTS	RMC
4	8/23/13	REV. PER TWP. ENG. LETTER DATED 7/31/13	RMC
3	6/24/13	REV. PER TWP. ENG. LETTERS DATED 1/3/13, 2/7/13	JAS
2	5/6/13	REV. AS PER NPDES MINOR REVISION	JAS
1	11/30/12	REV. PER TWP. ENG. LETTER DATED 6/6/12	RMC

RENNINGER TRACT

PLAN AND PROFILE ROAD 'E'

PREPARED FOR

GAMBONE SWAMP PIKE, L.P.

NEW HANOVER TOWNSHIP

MONTGOMERY COUNTY

PENNSYLVANIA

Chambers Associates, Inc.
Consulting Engineers and Surveyors
2962 Skippack Pike P.O. Box 678
Worcester, PA 19490-0678
484-991-8187

SCALE	DATE	JOB	DRAWING NO.
1"= 50' H 1"= 5' V	4-27-12	485-084	SHEET 43 of 54
MANAGER: JPH		DRAWN BY: RMC	

L:\Projects\2005\05-125\Submissions\SUBDIVISION SET OF PLANS 1-9-17\05-125 S-P-E.dwg, 1/9/2017 11:48:02 AM, EDGEPAINT DOSSER PC

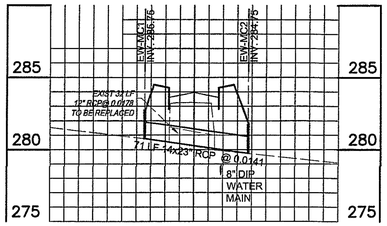

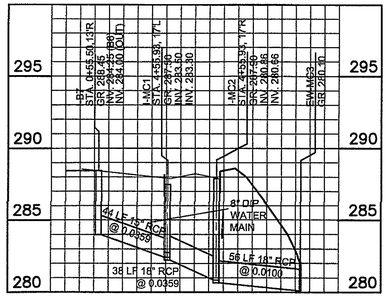

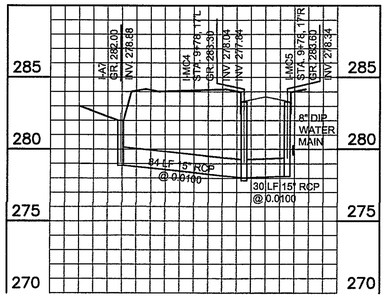

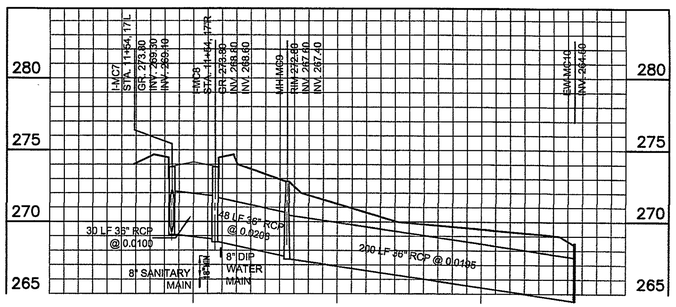

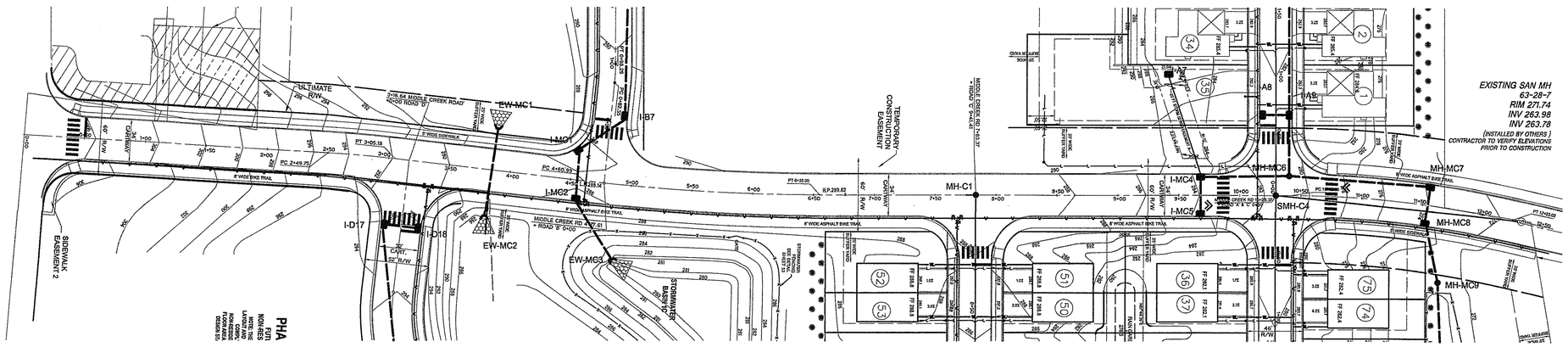

DROP MANHOLE NOTE:

1. A THERMO-PLASTIC LINER AS DESCRIBED IN N.H.T.A. STANDARD SPECIFICATIONS IS REQUIRED. THIS IS ALSO REQUIRED ON THE FIRST MANHOLE LOCATED DOWNSTREAM OF THE DROP MANHOLE.
2. LINERS CAN BE FIELD APPLIED TO EXISTING MANHOLES OR A PAINT-ON LINER (SUCH AS THE PARSONPOXY SEL-80 PRODUCT OR AN ACCEPTABLE EQUIVALENT) CAN BE APPLIED.

CONNECTION NOTE:

3. CONNECTIONS TO EXISTING MANHOLES SHOULD BE MADE BY CUTTING REQUIRED OPENING BY SUCH METHODS SO AS TO PREVENT CRACKING OR SPALLING. OPENING SHOULD BE OF SUFFICIENT SIZE TO ACCOMODATE PIPE WITH A LINK SEAL MODULAR PENETRATION SEAL AS APPROVED BY N.H.T.A.
4. NEW CONSTRUCTION 'BY OTHERS' SHOULD INSTALL A 5 FEET LONG 8 INCH DIAMETER PVC SDR-35 STUB AT THE REQUIRED SLOPE FOR FUTUER CONNECTIONS.

LEGEND

SYMBOL	DESCRIPTION
o	EXISTING IRON (UNLESS OTHERWISE NOTED)
	EXISTING GRADE
	PROPOSED GRADE
	EXISTING STORM SEWER
	PROPOSED STORM SEWER
	EXISTING SANITARY SEWER
	PROPOSED SANITARY SEWER
W W	EXISTING WATER LINE
E E	EXISTING ELECTRIC LINE
OE OE	EXISTING OVERHEAD ELECTRIC LINE
G G	EXISTING GAS LINE
T T	EXISTING TELEPHONE LINE
W W	PROPOSED WATER SERVICE
WL WL	PROPOSED WATER SERVICE LATERAL
L L	EXISTING SANITARY SEWER LATERAL
L L	PROPSED SANITARY SEWER LATERAL

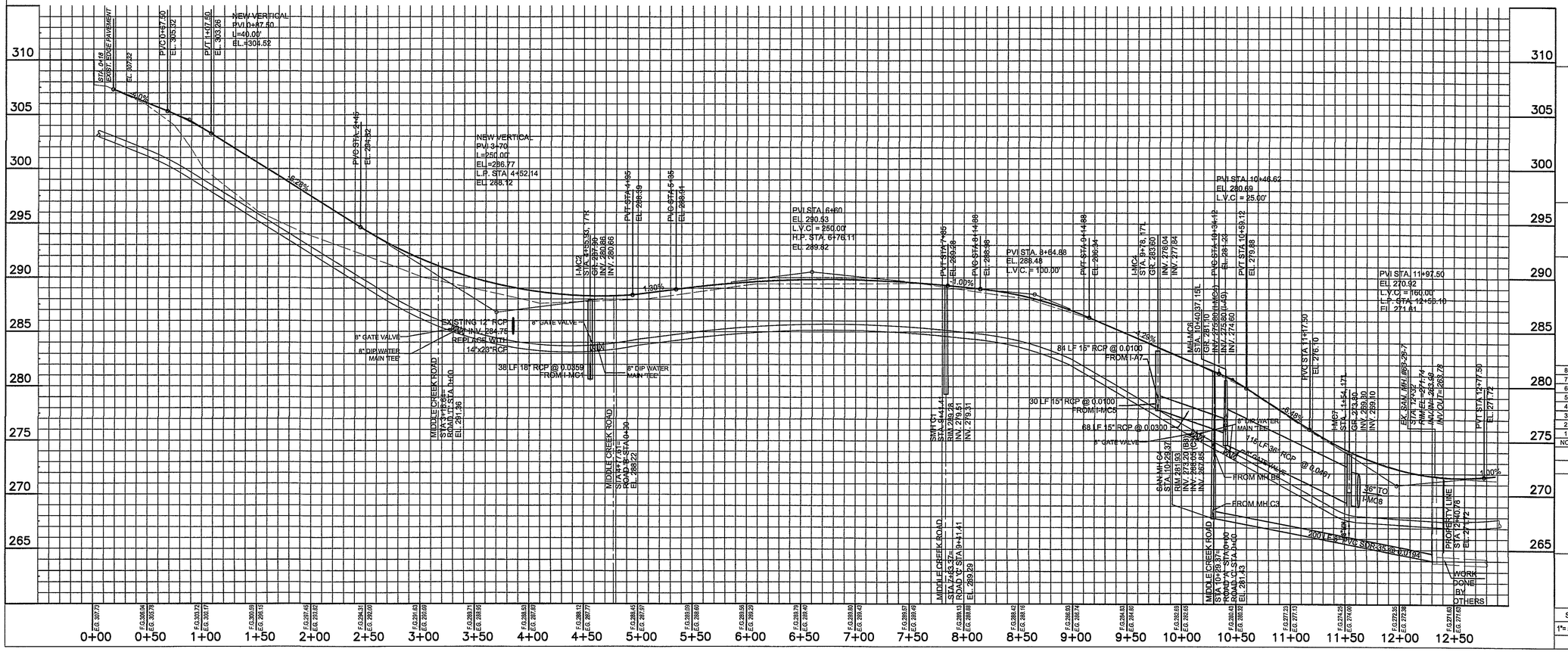

"FINAL"

50 0 50 100 150
GRAPHIC SCALE

COPYRIGHT

CHAMBERS ASSOCIATES, INC., CIVIL ENGINEERS & SURVEYORS, EXPRESSLY RESERVES ITS COMMON LAW COPYRIGHT AND ALL OTHER PROPRIETARY RIGHTS IN THESE PLANS. ALL DRAWINGS, SPECIFICATIONS, AND COPIES THEREOF ARE AND SHALL REMAIN THE PROPERTY OF CHAMBERS ASSOCIATES, INC. THEY ARE TO BE USED ONLY WITH RESPECT TO THIS PROJECT AND ARE NEITHER TO BE USED ON ANY OTHER PROJECT, NOR ARE THEY TO BE ASSIGNED TO ANY THIRD PARTY WITHOUT FIRST OBTAINING THE EXPRESS WRITTEN PERMISSION AND CONSENT OF CHAMBERS ASSOCIATES, INC. ANY RE-USE WITHOUT WRITTEN PERMISSION, VERIFICATION, CONSENT, OR ADAPTATION BY CHAMBERS ASSOCIATES, INC. FOR THE SPECIFIC PURPOSE INTENDED, WILL BE AT THE THIRD PARTY'S SOLE RISK AND WITHOUT LIABILITY OR LEGAL EXPOSURE TO CHAMBERS ASSOCIATES, INC. THE THIRD PARTY SHALL FURTHER INDEMNIFY AND HOLD HARMLESS CHAMBERS ASSOCIATES, INC. FROM ALL CLAIMS, DAMAGES, LOSSES AND EXPENSES ARISING THERETO OR RESULTING THEREFROM.

NO.	DATE	DESCRIPTION	BY
8	1/9/17	REVISED PHASE "D"	JAS
7	11/9/15	REVISED PHASE "B"	JAS
6	8/12/14	REV. MIDDLE CREEK ROAD	RMC
5	9/8/13	REV. PER TWP. ENG. COMMENTS	RMC
4	8/23/13	REV. PER TWP. ENG. LETTERS DATED 7/31/13	RMC
3	6/24/13	REV. PER TWP. ENG. LETTERS DATED 1/3/13, 2/7/13	JAS
2	5/8/13	REV. AS PER NPDES MINOR REVISION	JAS
1	11/30/12	REV. PER TWP. ENG. LETTER DATED 6/6/12	RMC

RENNINGER TRACT

PLAN AND PROFILE MIDDLE CREEK ROAD

PREPARED FOR

GAMBONE SWAMP PIKE, L.P.

NEW HANOVER TOWNSHIP

MONTGOMERY COUNTY

PENNSYLVANIA

Chambers Associates, Inc.
Consulting Engineers and Surveyors
2962 Skippack Pike P.O. Box 678
Worcester, PA 19490-0678
484-991-8187

SCALE	DATE	JOB	DRAWING NO.
1"= 50' H 1"= 5' V	4-27-12	485-084	SHEET 44 of 54
MANAGER: JPH		DRAWN BY: RMC	

L:\Projects\2012\485-084\Drawings\ENGINEERING\PLAN SET 04\ PLANS & PLOTSHEETS 39-54.dwg, 44 Middle Creek Road, 1/25/2017 11:48:34 AM, ROSEMARY CICCIONE PE

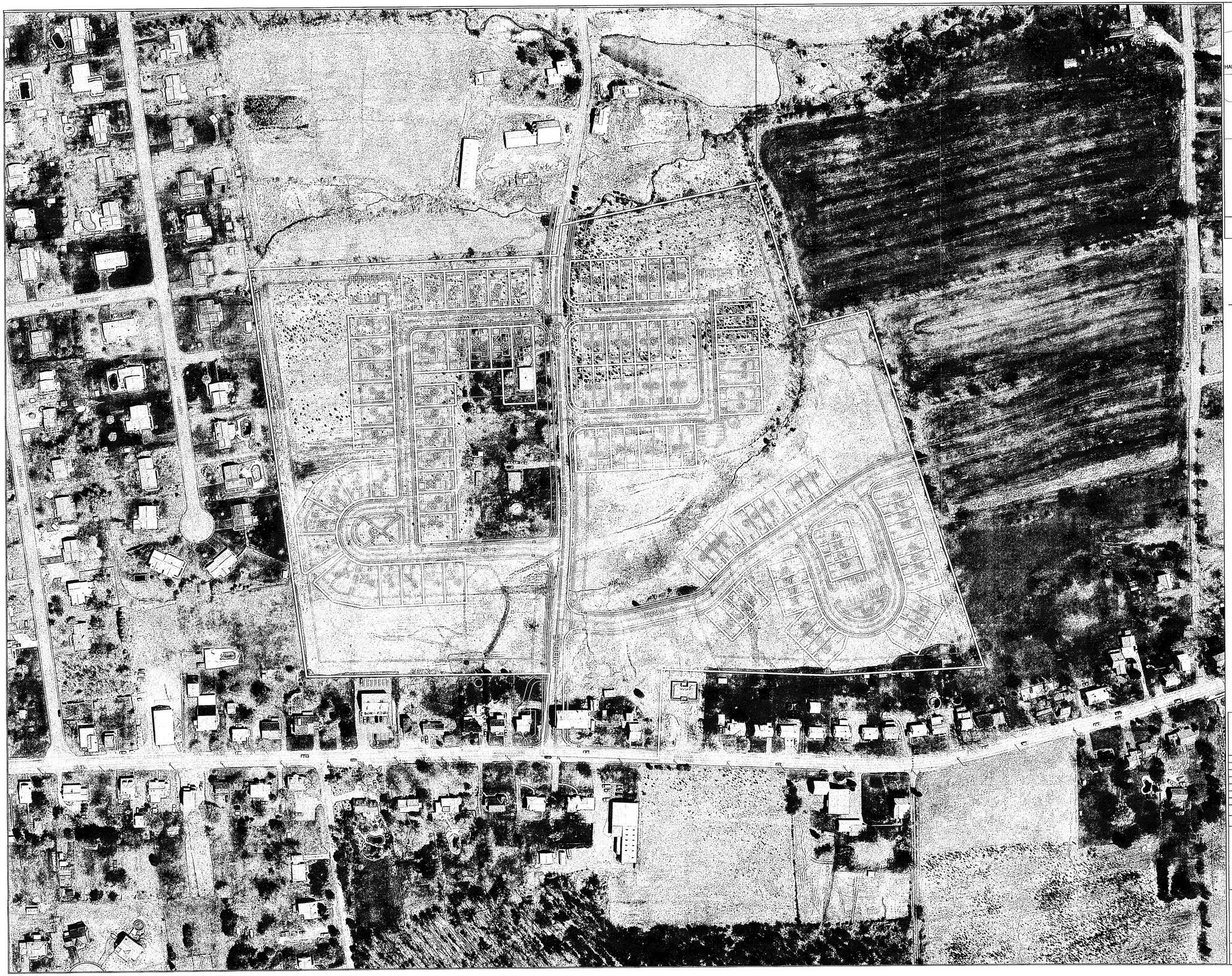

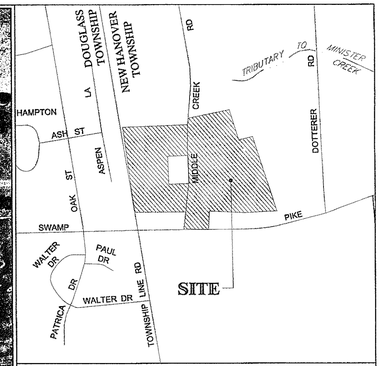

LOCATION MAP
SCALE: 1"= 800'

"FINAL"

40 0 40 80 120
GRAPHIC SCALE

NO.	DATE	DESCRIPTION	BY
5	1/9/17	REVISED PHASE "D"	JAS
4	11/9/15	REVISED PHASE "B"	JAS
3	8/12/14	REV MIDDLE CREEK ROAD	RMC
2	9/6/13	REV. PER TWP. ENG. COMMENTS	RMC
1	8/23/13	REV. PER TWP. ENG. LETTER DATED 7/31/13	JAS

RENNINGER PROPERTY SUBDIVISION

AERIAL PHOTOGRAPH

PREPARED FOR

GAMBONE SWAMP PIKE, L.P.

NEW HANOVER TOWNSHIP

MONTGOMERY COUNTY

PENNSYLVANIA

Chambers Associates, Inc.
Consulting Engineers and Surveyors
2962 Skippack Pike P.O. Box 678
Worcester, PA 19490-0678
484-991-8187

SCALE	DATE	JOB	DRAWING NO.
1"= 100'	2-12-13	485-084	SHEET 45 of 54

MANAGER: JPH DRAWN BY: JAS

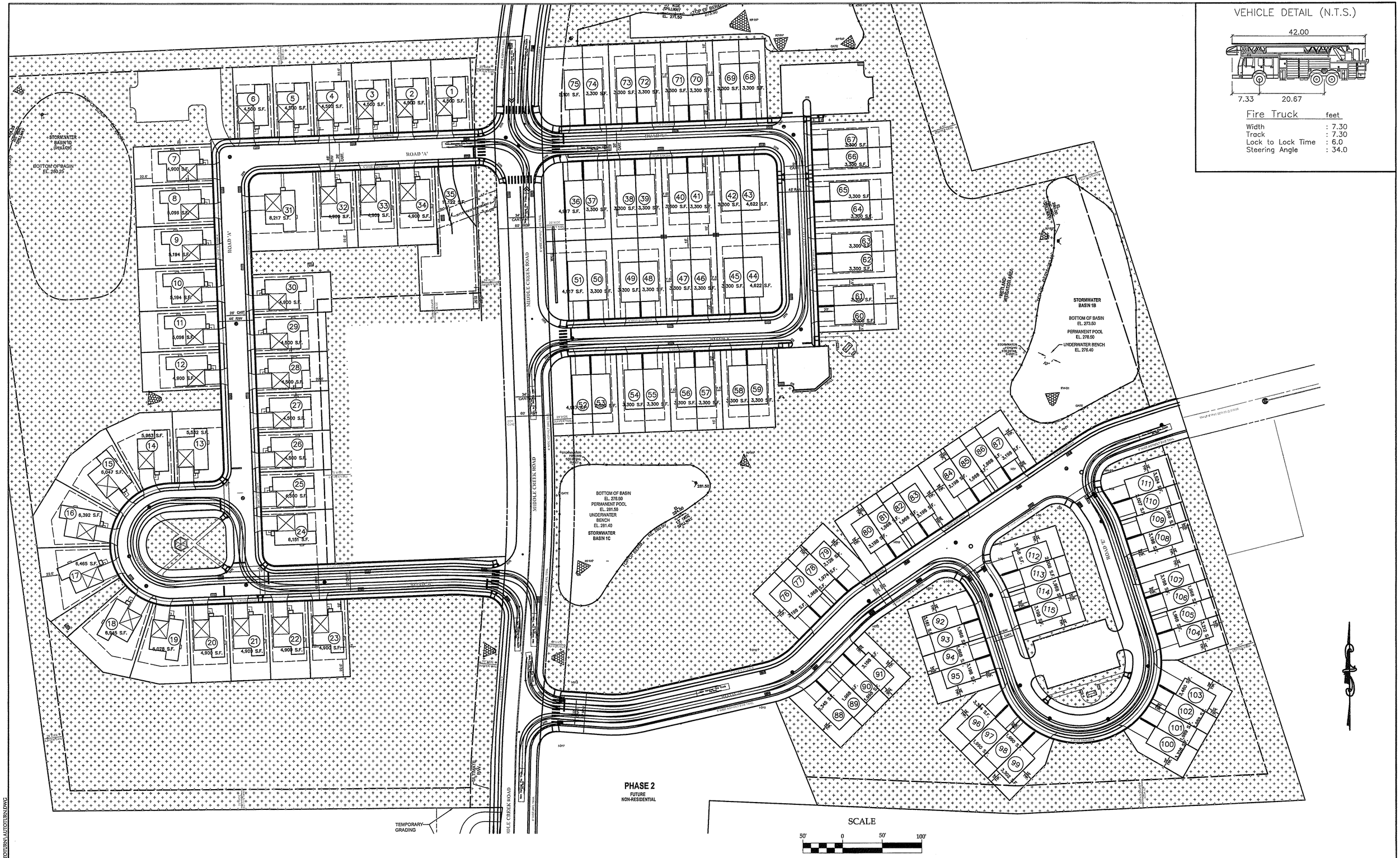

McMAHON ASSOCIATES, INC. 425 COMMERCE DRIVE, SUITE 200 FORT WASHINGTON, PA. 19034 TELE: (215)-283-9444 FAX: (215)-283-9447	DESIGN BY: --- DRAWN BY: --- CHECKED BY: SAK	JOB NO: 812782 DWG: AUTOTURN DATE: 2-13-2013	CLIENT GAMBONE SWAMP PIKE, L.P. 1030 WEST GERMANTOWN PIKE NORRISTOWN, PA 19403 610-277-4220	RENNINGER TRACT EMERGENCY VEHICLE CIRCULATION PLAN NEW HANOVER TOWNSHIPO MONTGOMERY COUNTY	McMAHON TRANSPORTATION ENGINEERS & PLANNERS

EMERGENCY VEHICLE CIRCULATION PLAN

DRAWING NUMBER

SHEET 46 OF 54

I:\ENG\812782\DWG\AUTOTURN\AUTOTURN.DWG

VEHICLE DETAIL (N.T.S.)

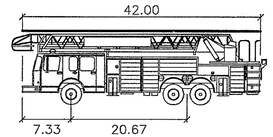

Fire Truck	feet
Width	: 7.30
Track	: 7.30
Lock to Lock Time	: 6.0
Steering Angle	: 34.0

STORMWATER BASIN 1D (SHALLOW)
BOTTOM OF BASIN EL. 280.25
ROAD 'A'
ROAD 'B'
ROAD 'C'
ROAD 'D'
MIDDLE CREEK ROAD
STORMWATER BASIN 1B
BOTTOM OF BASIN EL. 273.50
PERMANENT POOL EL. 276.50
UNDERWATER BENCH EL. 276.40
BOTTOM OF BASIN EL. 278.59
PERMANENT POOL EL. 281.50
UNDERWATER BENCH EL. 281.40
STORMWATER BASIN 1C
PHASE 2
FUTURE
NON-RESIDENTIAL
TEMPORARY GRADING
SCALE
50' 0 50' 100'

McMAHON ASSOCIATES, INC. 425 COMMERCE DRIVE, SUITE 200 FORT WASHINGTON, PA. 19034 TELE: (215)-283-9444 FAX: (215)-283-9447	DESIGN BY: --- DRAWN BY: --- CHECKED BY: SAK	JOB NO: 812782 DWG: AUTOTURN DATE: 2-13-2013	CLIENT GAMBONE SWAMP PIKE, L.P. 1030 WEST GERMANTOWN PIKE NORRISTOWN, PA 19403 610-277-4220	RENNINGER TRACT EMERGENCY VEHICLE CIRCULATION PLAN NEW HANOVER TOWNSHIPO MONTGOMERY COUNTY	McMAHON TRANSPORTATION ENGINEERS & PLANNERS	EMERGENCY VEHICLE CIRCULATION PLAN DRAWING NUMBER SHEET 47 OF 54

I:\ENGR\812782\DWG\AUTOTURN\AUTOTURN.DWG

VEHICLE DETAIL (N.T.S.)

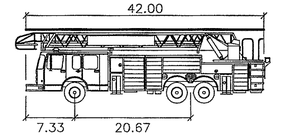

Fire Truck	feet
Width	: 7.30
Track	: 7.30
Lock to Lock Time	: 6.0
Steering Angle	: 34.0

STORMWATER BASIN 1D (SHALLOW)
BOTTOM OF BASIN EL. 260.25

ROAD 'B'
ROAD 'C'
ROAD 'D'
MIDDLE CREEK ROAD

STORMWATER BASIN 1B
BOTTOM OF BASIN EL. 273.50
PERMANENT POOL EL. 278.50
UNDERWATER BENCH EL. 278.40

BOTTOM OF BASIN EL. 278.50
PERMANENT POOL EL. 281.50
UNDERWATER BENCH EL. 281.40
STORMWATER BASIN 1C

WETLAND MITIGATION AREA

PHASE 2
FUTURE
NON-RESIDENTIAL

TEMPORARY GRADING

SCALE
50' 0 50' 100'

McMAHON ASSOCIATES, INC. 425 COMMERCE DRIVE, SUITE 200 FORT WASHINGTON, PA. 19034 TELE: (215)-283-9444 FAX: (215)-283-9447	DESIGN BY: --- DRAWN BY: --- CHECKED BY: SAK	JOB NO: 812782 DWG: AUTOTURN DATE: 2-13-2013	CLIENT GAMBONE SWAMP PIKE, L.P. 1030 WEST GERMANTOWN PIKE NORRISTOWN, PA 19403 610-277-4220	RENNINGER TRACT EMERGENCY VEHICLE CIRCULATION PLAN NEW HANOVER TOWNSHIPO MONTGOMERY COUNTY	McMAHON TRANSPORTATION ENGINEERS & PLANNERS	EMERGENCY VEHICLE CIRCULATION PLAN DRAWING NUMBER SHEET 48 OF 54

I:\ENG\812782\DWG\AUTOTURN\AUTOTURN.DWG

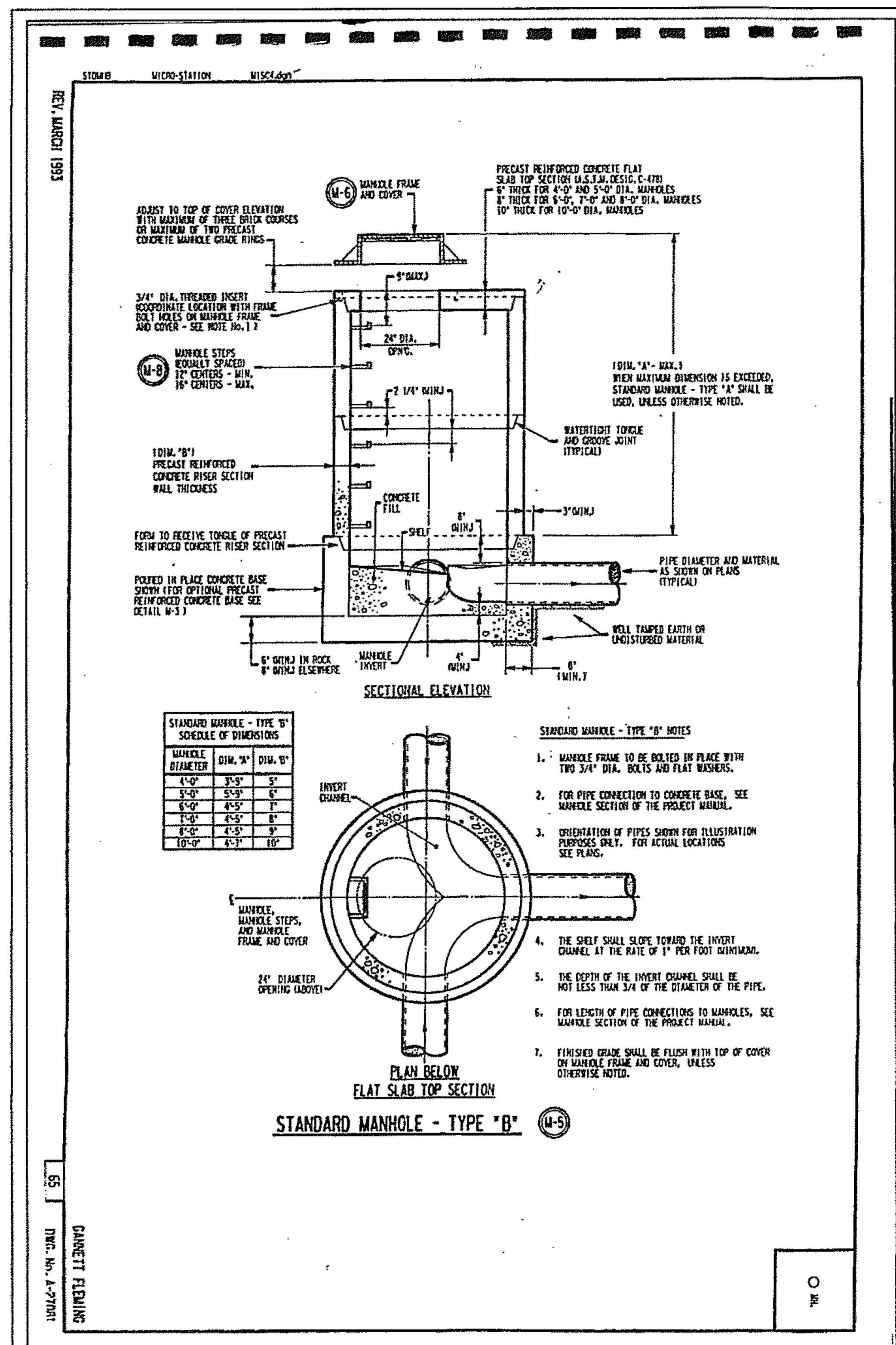

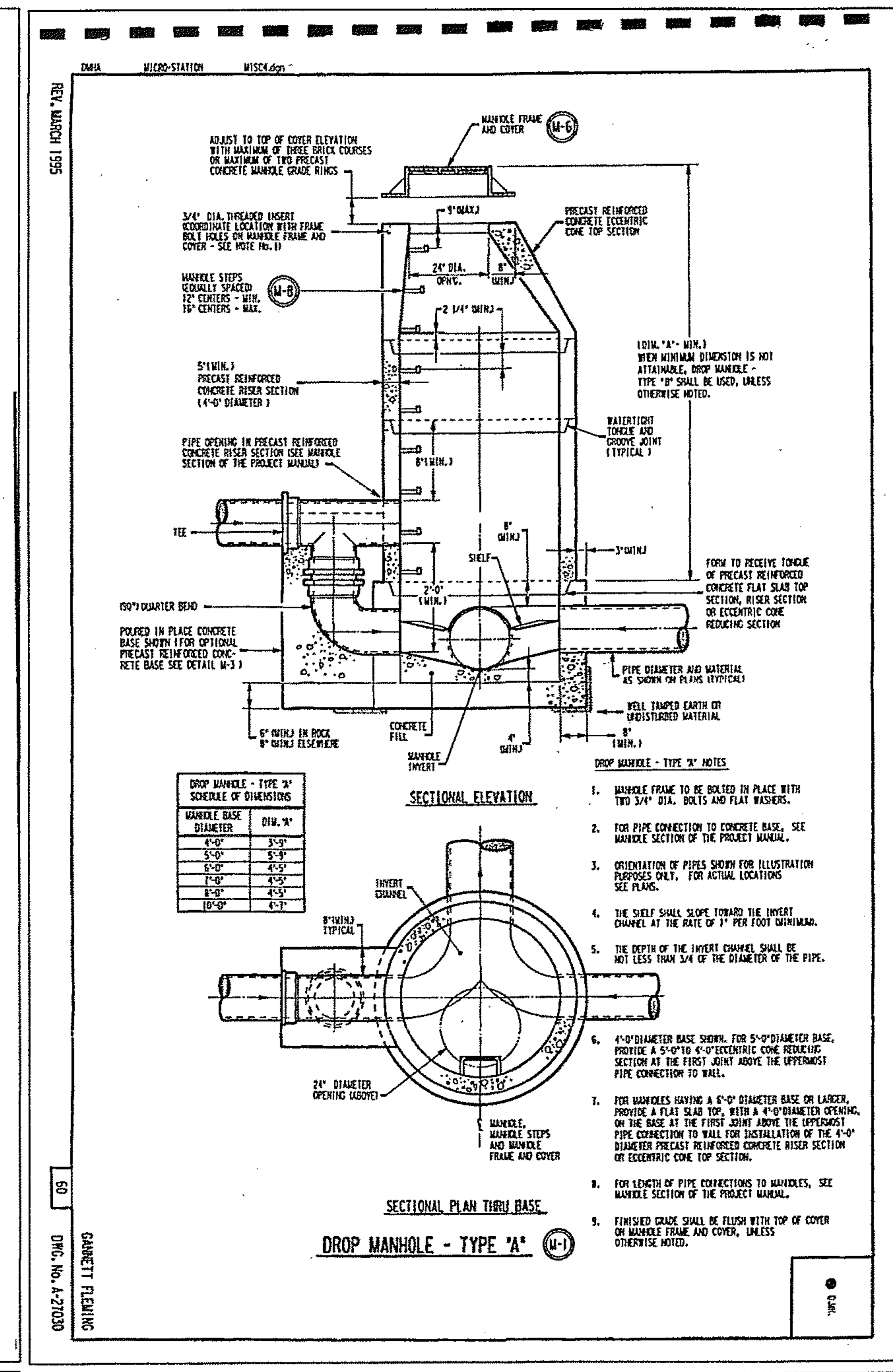

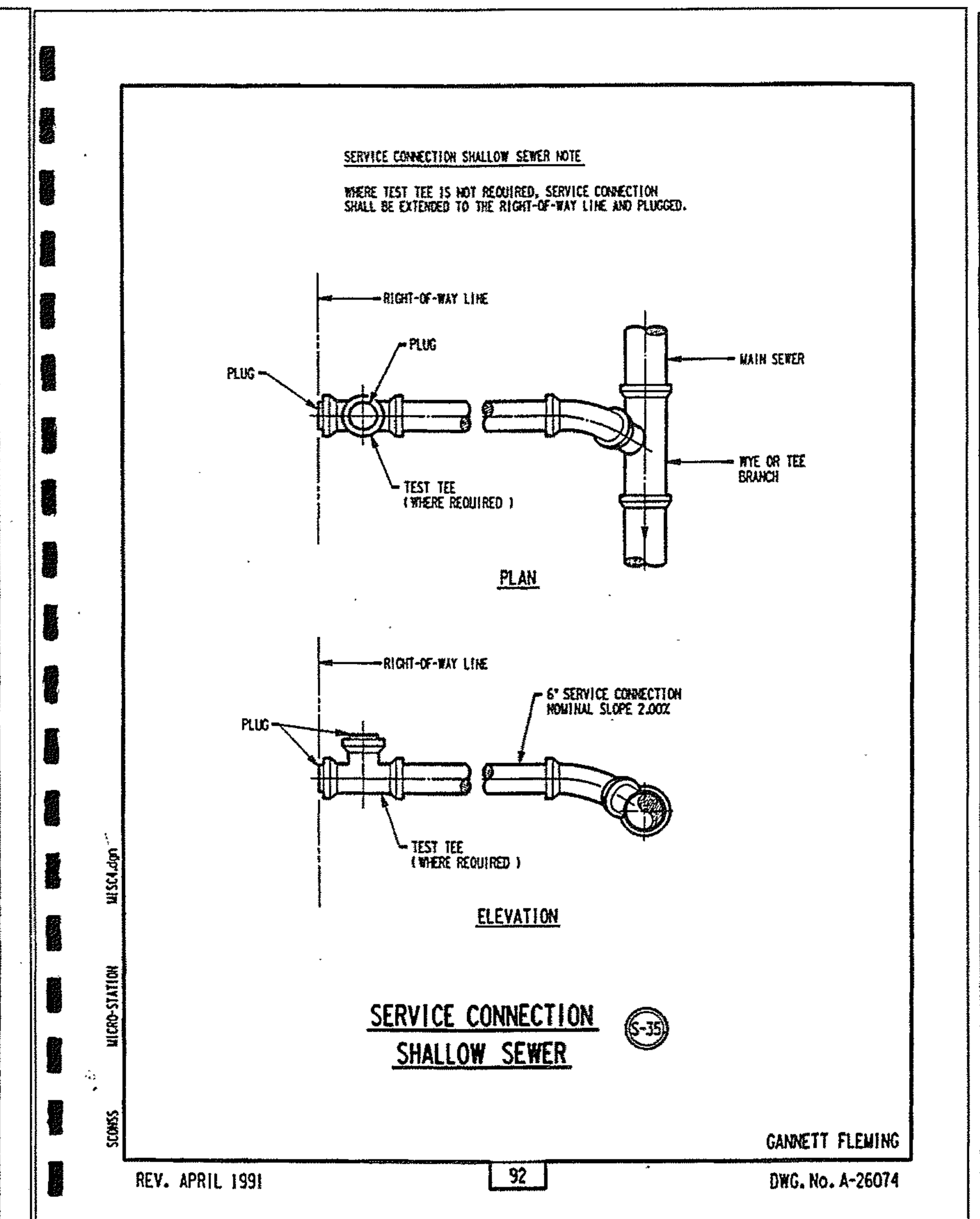

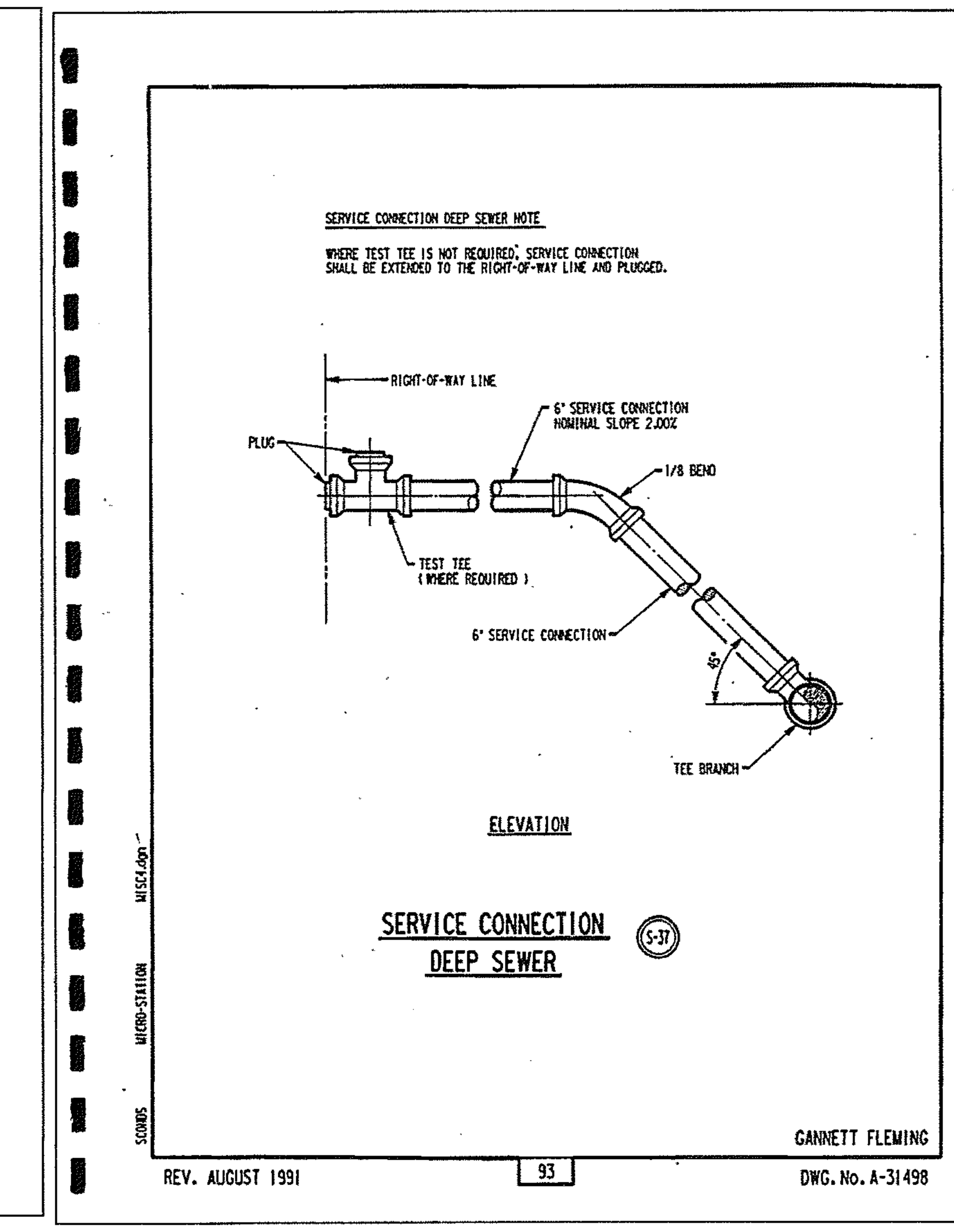

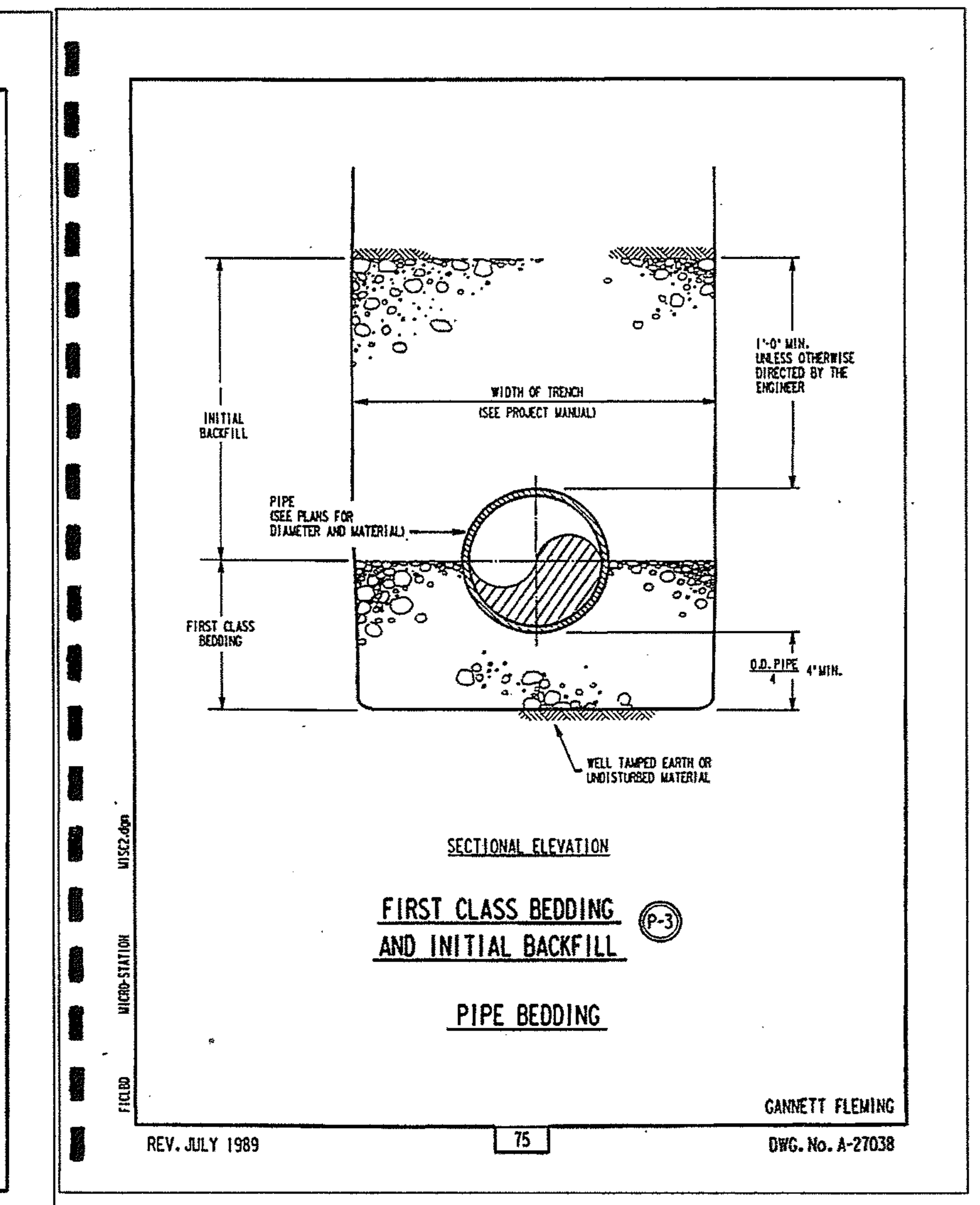

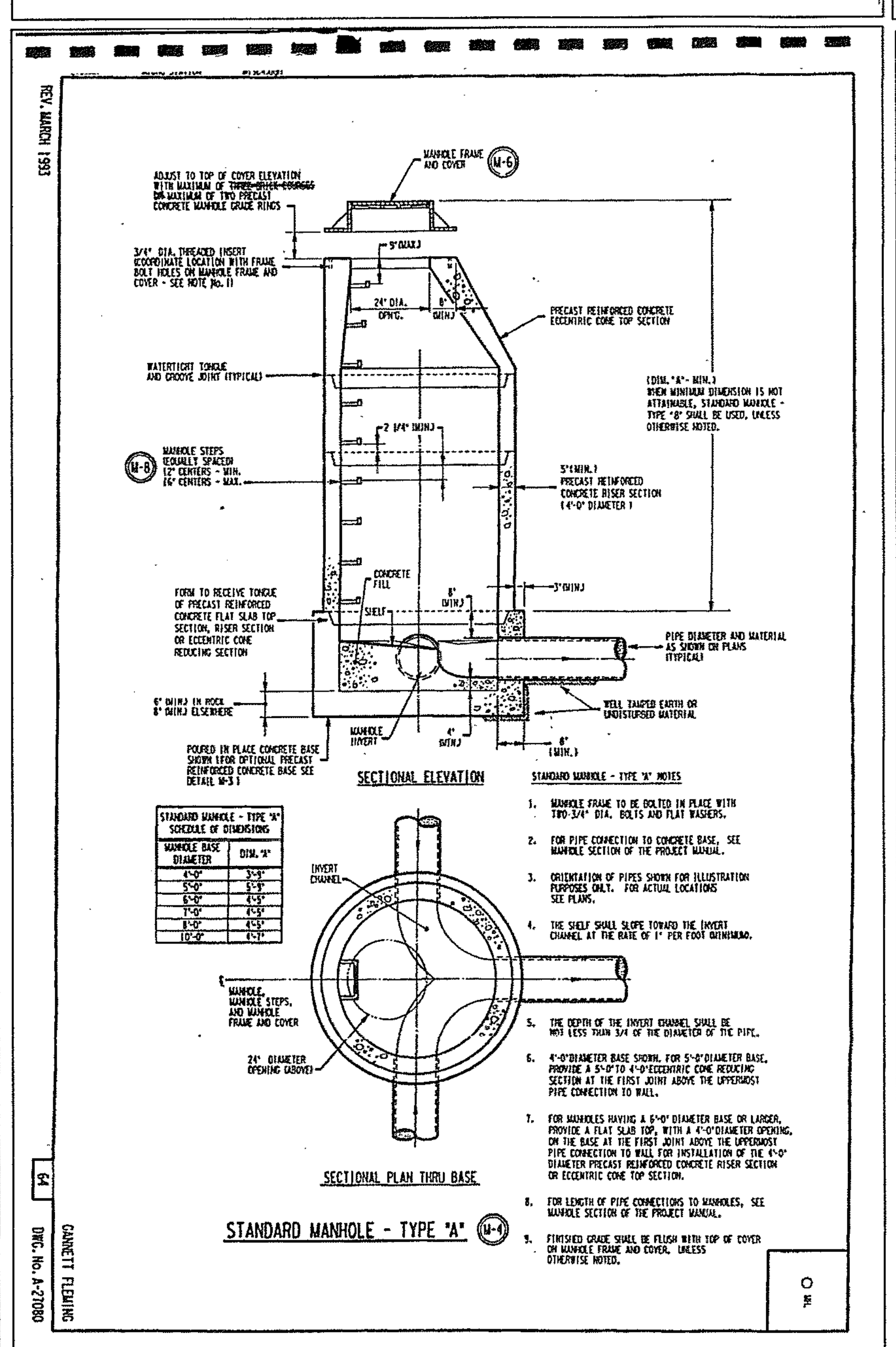

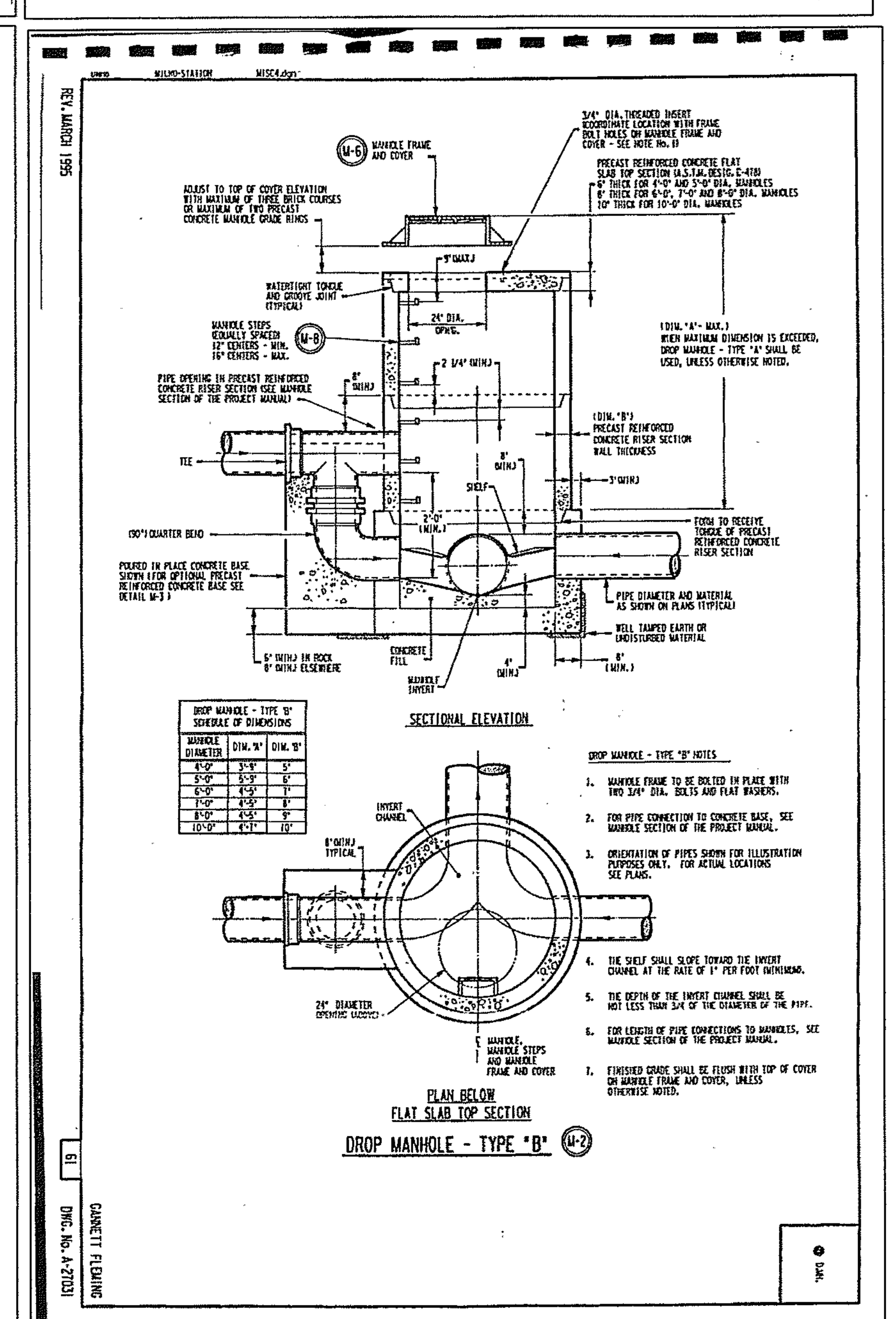

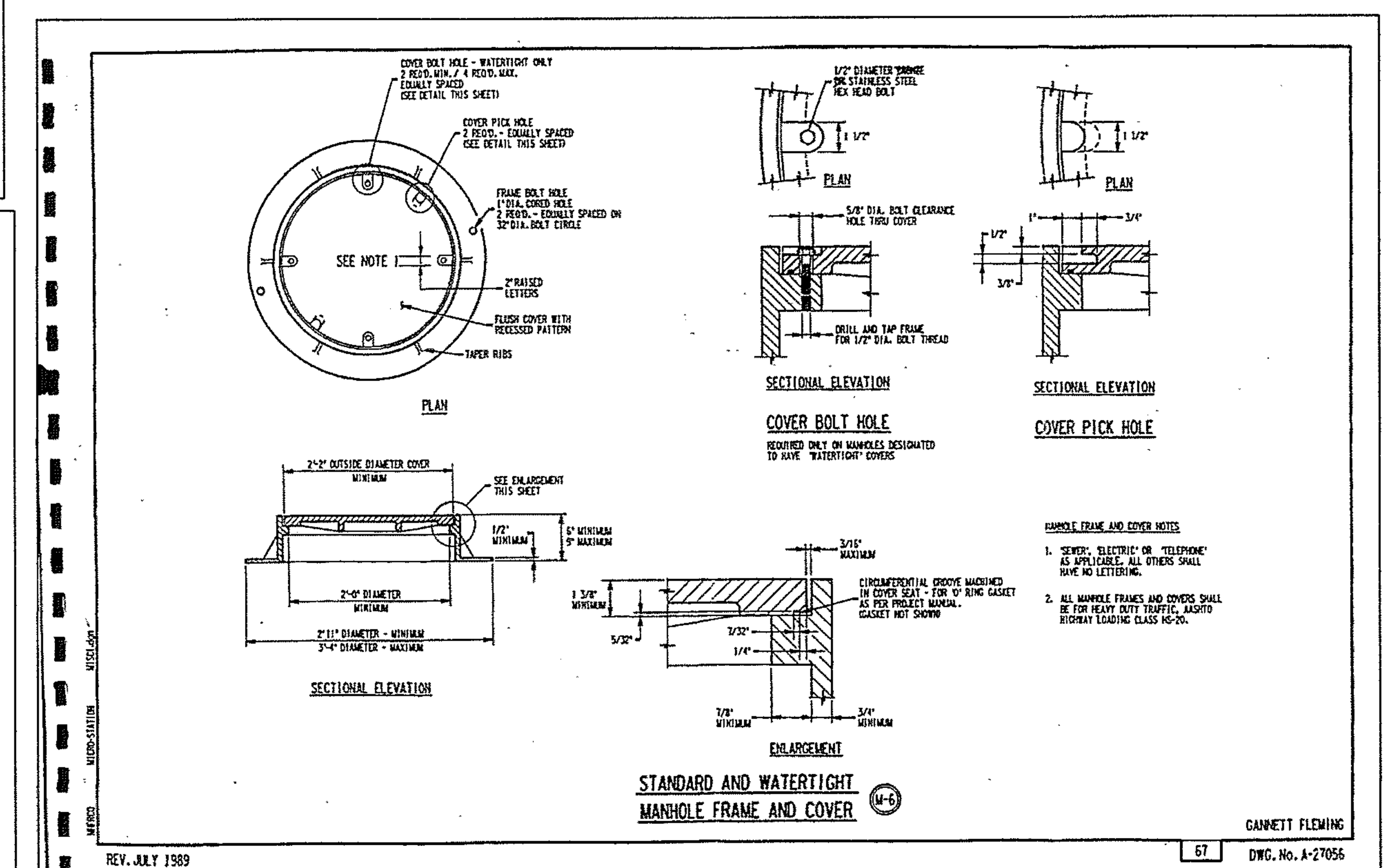

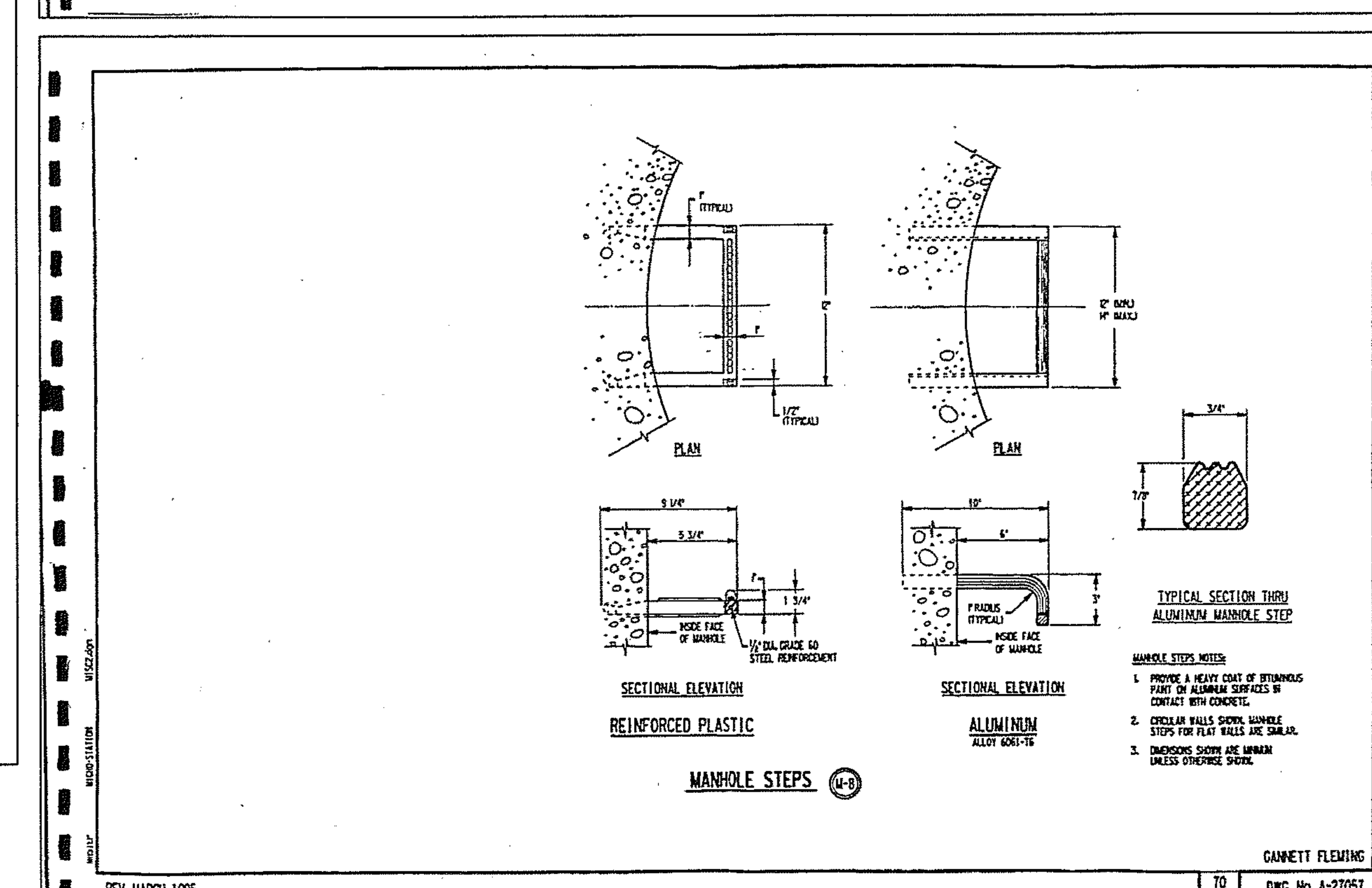

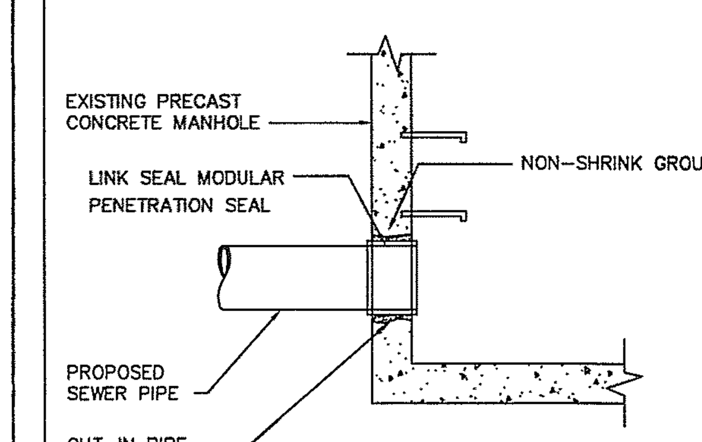

SECTION

SANITARY SWR. CONNECTION
TO EXISTING MANHOLE

NOTE:
AFTER CONNECTION OF PIPE TO MANHOLE REMOVE CONCRETE CHANNEL AS REQUIRED AND RECONSTRUCT IN ACCORDANCE WITH DETAIL DRAWINGS.

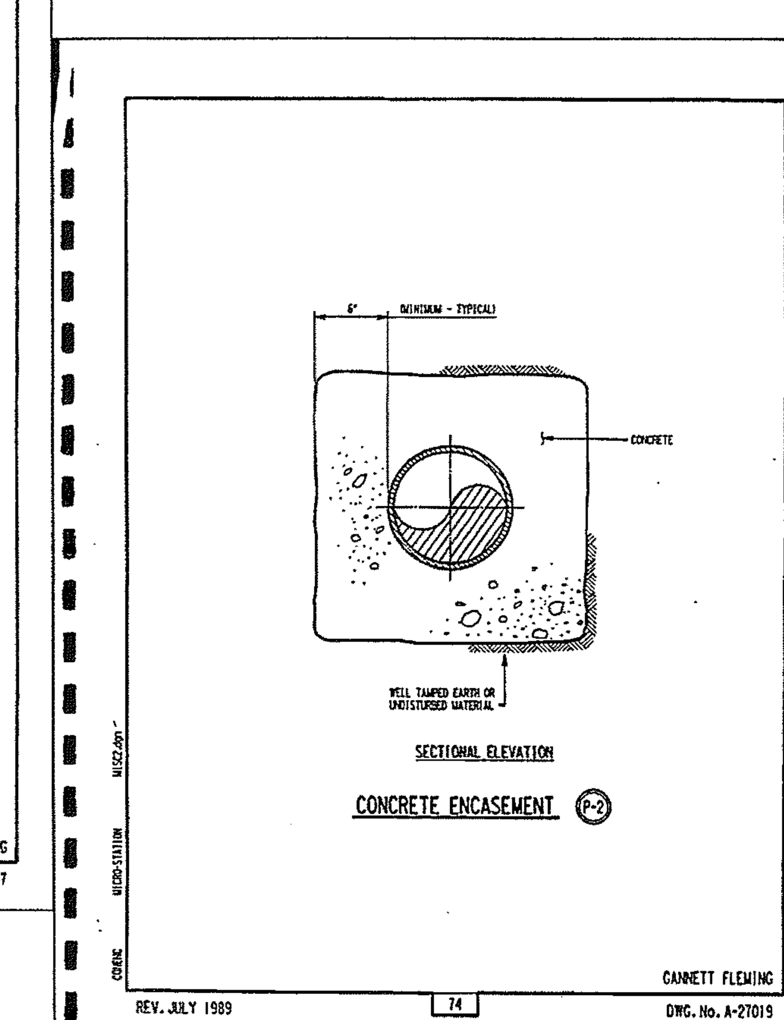

SANITARY SEWER CONSTRUCTION NOTES:

1. All sanitary sewer improvements shall be constructed in accordance with the Standard Construction and Material Specifications for Sanitary Sewer Extensions for the New Hanover Township Authority, latest edition.
2. Shop drawings for all materials to be used in the construction of the sanitary sewer system must be submitted to New Hanover Township Authority for review and comments.
3. Connections to existing manholes should be made by cutting required opening by such methods so as to prevent cracking and spalling concrete make openings of sufficient size to accommodate pipe with a link seal modular penetration seal.
4. Prior to commencing construction, all materials to be used on the job must be inspected by a representative of New Hanover Township Authority.
5. Sanitary sewer facilities located within proposed Rights–of–Way shall be offered for dedication to New Hanover Township Authority. Sanitary sewer facilities located outside of proposed Right–of–Ways, including but not limited to lateral piping, cleanouts, etc..., shall be maintained by the property owner.
6. Sanitary sewer service is provided to first floor elevation only. Basement sewer service is not intended to be provided.
7. Sanitary sewer laterals shall be 6 inches in diameter to the limit of the Right–of–Way.
8. Cleanouts shall be provided for sanitary sewer laterals in conformance with township plumbing code.
9. A horizontal separation of 10 feet and/or a vertical clearance of 18 inches shall be maintained between the sanitary sewer and any other utility pipelines. Where pipelines must cross under a sewer, the installation must also provide adequate structural support for the sewer to prevent deflection and breaking of the sewer. Where proper clearances cannot be provided the sewer shall be concrete encased for a distance of 10 feet on either side of the conflict if aproved by the New Hanover Township Authority.
10. A minimum cover of 4 feet should be maintained.
11. "A–LOK" gaskets to be provided for manhole pipe penetrations.
12. Wrapidseal to be installed on all manhole joints and around the cone to frame connection.

"FINAL"

NO.	DATE	DESCRIPTION	BY
8	1/9/17	REVISED PHASE "D"	JAS
7	11/9/15	REVISED PHASE "B"	JAS
6	8/12/14	REV MIDDLE CREEK ROAD	RMC
5	9/6/13	REV. PER. TWP. ENG. COMMENTS	RMC
4	8/23/13	REV. PER. TWP. ENG. LETTER DATED 7/31/13	JAS
3	6/24/13	REV. PER TWP. ENG. LETTERS DATED 1/3/13, 2/7/13	JAS
2	5/6/13	REV. AS PER NPDES MINOR REVISION	JAS
1	11/30/12	REV. AS PER TWP. ENG. LETTER DATED 6/6/12	JAS

RENNINGER PROPERTY SUBDIVISION

SANITARY SEWER DETAILS

PREPARED FOR

GAMBONE SWAMP PIKE, L.P.

NEW HANOVER TOWNSHIP

MONTGOMERY COUNTY

PENNSYLVANIA

Chambers Associates, Inc.
Consulting Engineers and Surveyors
2962 Skippack Pike P.O. Box 678
Worcester, PA 19490–0678
484–991–8187

SCALE	DATE	JOB	DRAWING NO.	
N.T.S.	4/27/12	485–084	SHEET	49 of 54
MANAGER:	JPH		DRAWN BY:	JAS

L:\Projects\485084\19-Submissions\SUBMISSION SET OF PLANS 1-9-17\DETAILS-updated-npdes-details.dwg, 49 rev 4-21-13, 1/26/2017 11:33:24 AM, RICOH MP CW2200 PS

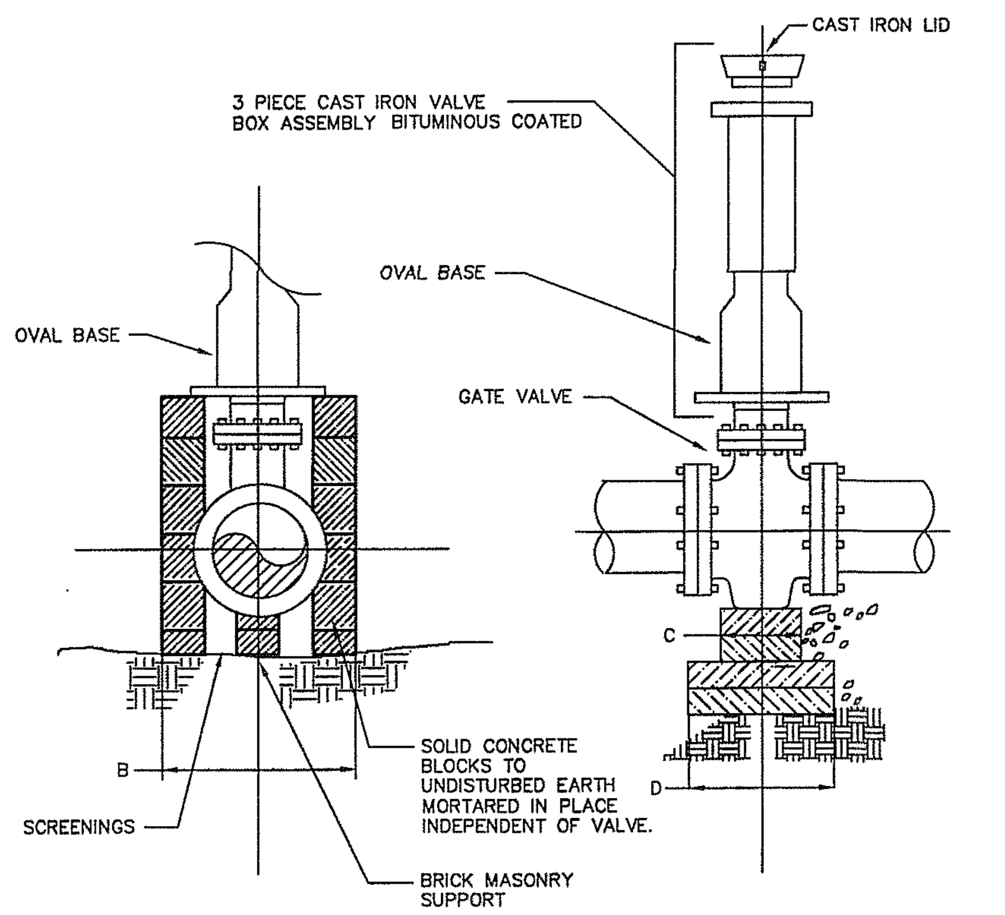

TYPICAL GATE VALVE WITH VALVE BOX

NTS

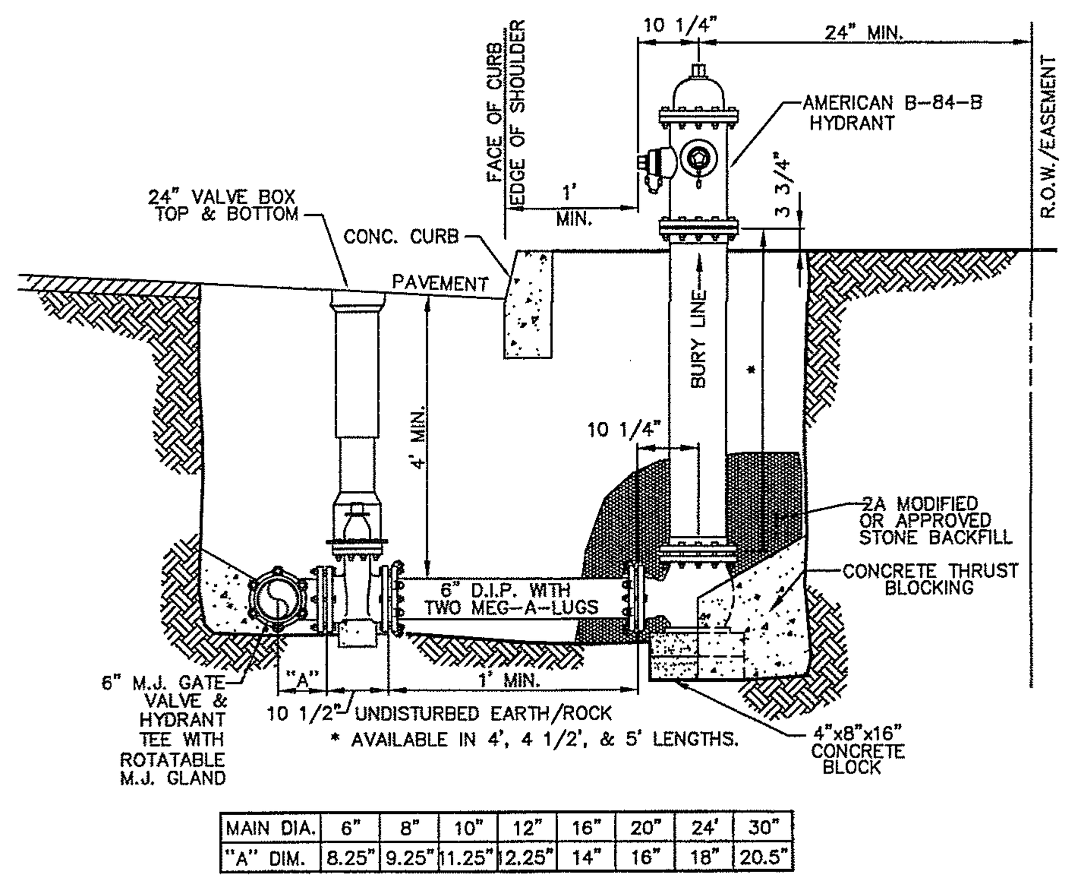

MAIN DIA.	6"	8"	10"	12"	16"	20"	24'	30"
"A" DIM.	8.25"	9.25"	11.25"	12.25"	14"	16"	18"	20.5"

NOTE:

ENGINEER TO DETERMINE LOCATION WHERE NO CURB EXISTS.

TYPICAL FIRE HYDRANT INSTALLATION

NTS

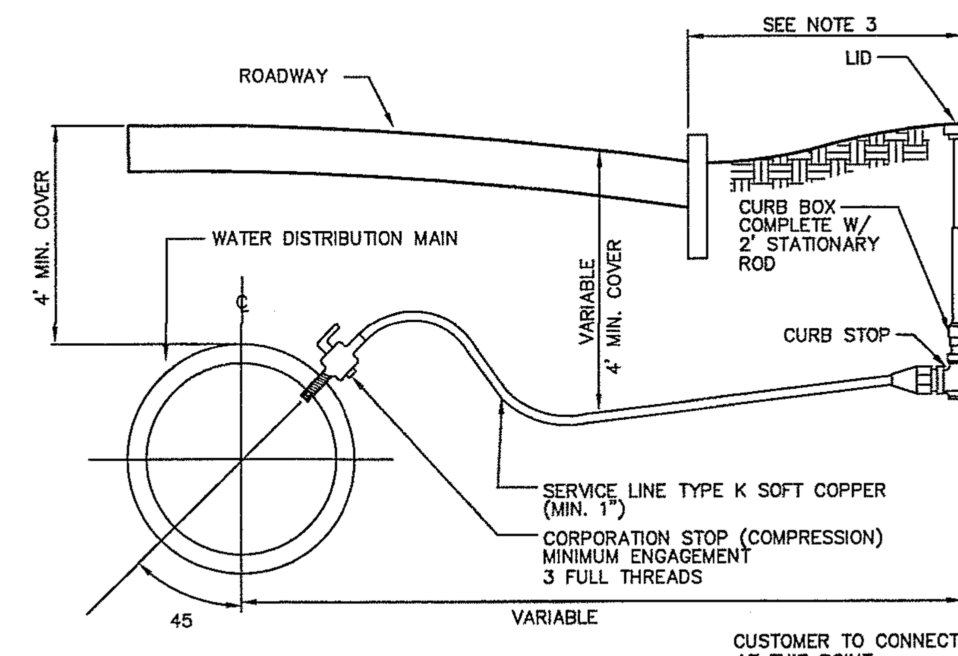

NOTES:

1. FOR TAPS > 1" CONNECTION, PROVIDE TAPPING SADDLE IN ACCORDANCE WITH AUTHORITY SPECIFICATIONS.
2. DO NOT PLACE CURB BOX IN PAVED AREAS.
3. WHERE SIDEWALK PARALLELS ROADWAY, THE CURB BOX SHALL BE PLACED BETWEEN THE CURB AND SIDEWALK. ALL OTHER LOCATIONS, CURB BOX TO BE PLACED WHERE DIRECTED BY AUTHORITY.
4. CUSTOMER IS RESPONSIBLE FOR MAINTENANCE OF ALL SERVICE PIPING AND PLUMBING BEYOND THE CURB STOP, WITH EXCEPTION OF WATER METER.
5. PROVIDE COMPRESSION FITTINGS ON CURB AND CORPORATION STOP.

STANDARD WATER SERVICE CONNECTION

NTS

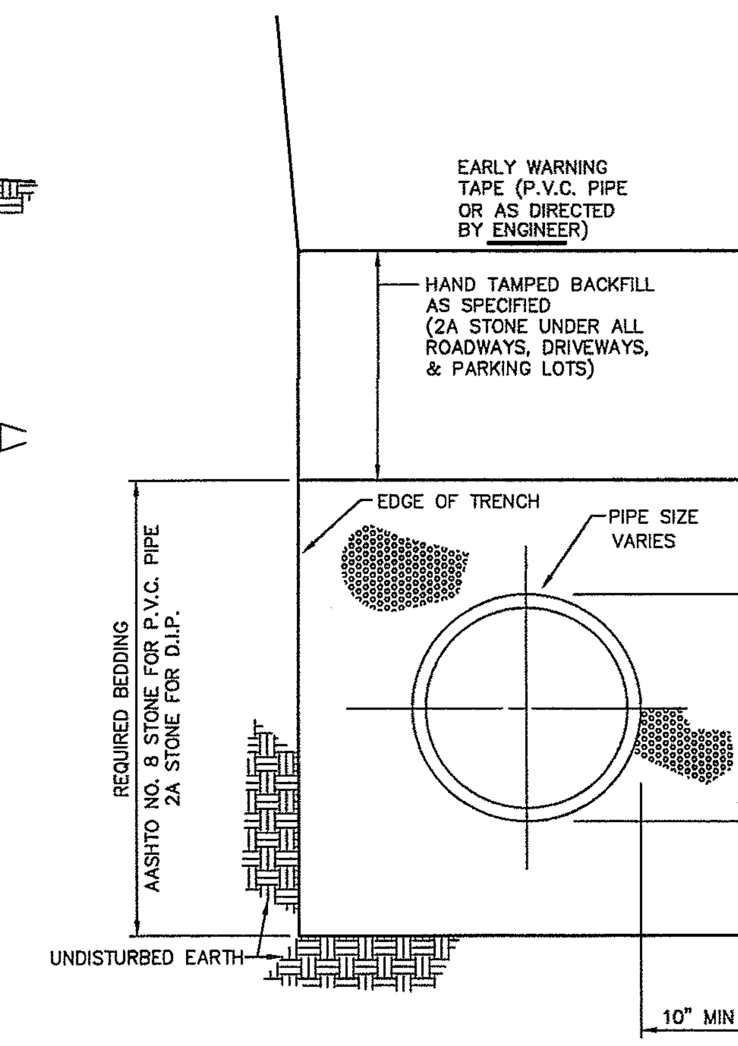

STANDARD PIPE BEDDING

NTS

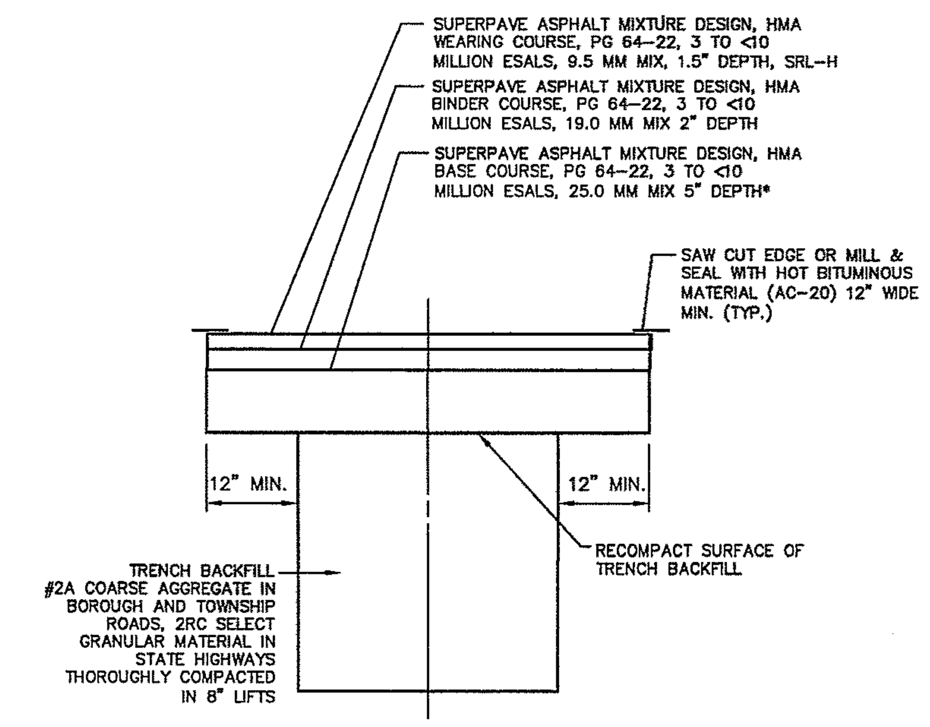

NOTES:

1. SPECIAL CONDITIONS OF ROAD OPENING PERMIT MAY SUPERSEDE THIS DETAIL.
2. EXPOSED VERTICAL AND HORIZONTAL SURFACES SHALL BE PREPARED AS PER PUB 408, SECTION 40J. 3(F)
3. OVER CUT ALL EDGES 1'. EXCAVATE OLD AND TEMPORARY MATERIAL. RECOMPACT SUB-GRADE. TACK COAT ALL VERTICAL EDGES. INSTALL ONLY BASE COURSE AND BINDER IN ONE DAY.
* MATCH EXISTING DEPTH IF GREATER

PERMANENT PAVEMENT RESTORATION

NTS

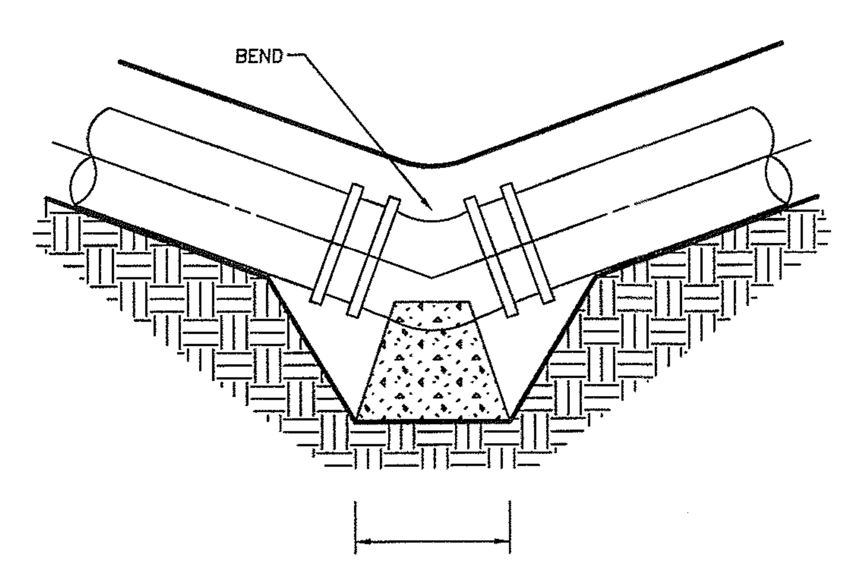

NOTES:

1. ALL CONCRETE SHALL HAVE A MIN. COMPRESSIVE STRENGTH OF 2500 P.S.I.
2. ALL FITTINGS AND JOINTS SHALL BE COVERED WITH POLYETHYLENE FILM BEFORE PLACING CONCRETE.
3. PAINT ALL EXPOSED STEEL WITH TWO COATS OF ASTM D1187 ASPHALT EMULSION.
4. FOR THE REQUIRED BEARING SURFACE SEE STANDARD DETAIL W8.

VERTICAL DOWNWARD THRUST BLOCK

NTS

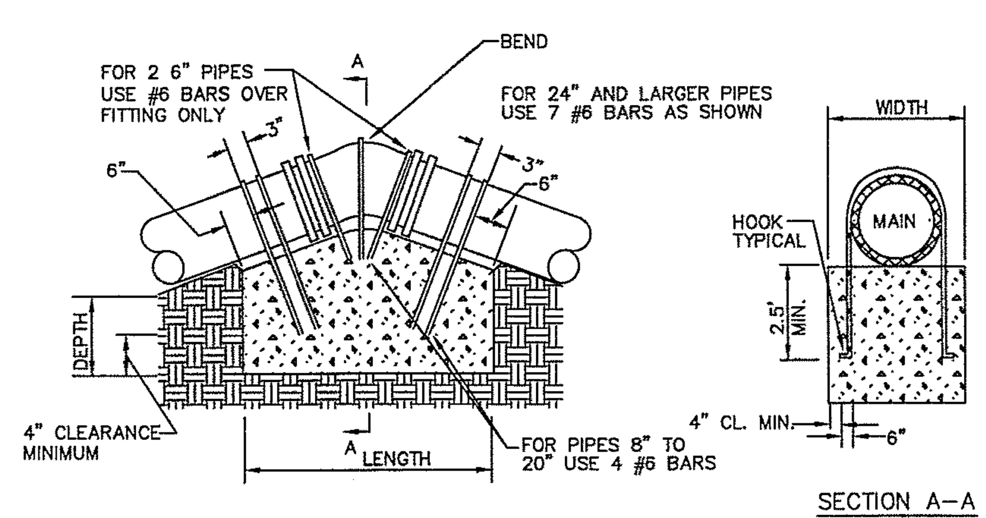

NOTES:

1. ALL CONCRETE SHALL HAVE A MINIMUM COMPRESSIVE STRENGTH OF 2500 P.S.I.
2. ALL REINFORCING STEEL SHALL BE DEFORMED BARS U-SHAPED AROUND PIPE.
3. ALL FITTINGS AND JOINTS SHALL BE ENVELOPED WITH 8 MIL. POLYETHYLENE FILM BEFORE PLACING CONCRETE.
4. PAINT ALL EXPOSED STEEL WITH TWO COATS OF ASTM D1187 ASPHALT EMULSION.

BEARING SURFACE AREAS – VERTICAL UPWARD THRUST
150 P.S.I. WORKING PRESSURE

PIPE SIZES	LENGTH			WIDTH			DEPTH		
	11.25°	22.25°	45°	11.25°	22.25°	45°	11.25°	22.25°	45°
6" & 8"	3'	4'	6'	3'	3'	3'	2'	3'	4'
10" & 12"	4'	6'	7'	4'	4.5'	4'	2.5'	3'	4'
14" & 16"	6'	8'	11'	4.5'	4.5'	4.5'	3.5'	5'	5'

ALL AREAS IN SQUARE FEET.

VERTICAL UPWARD THRUST BLOCKS

NTS

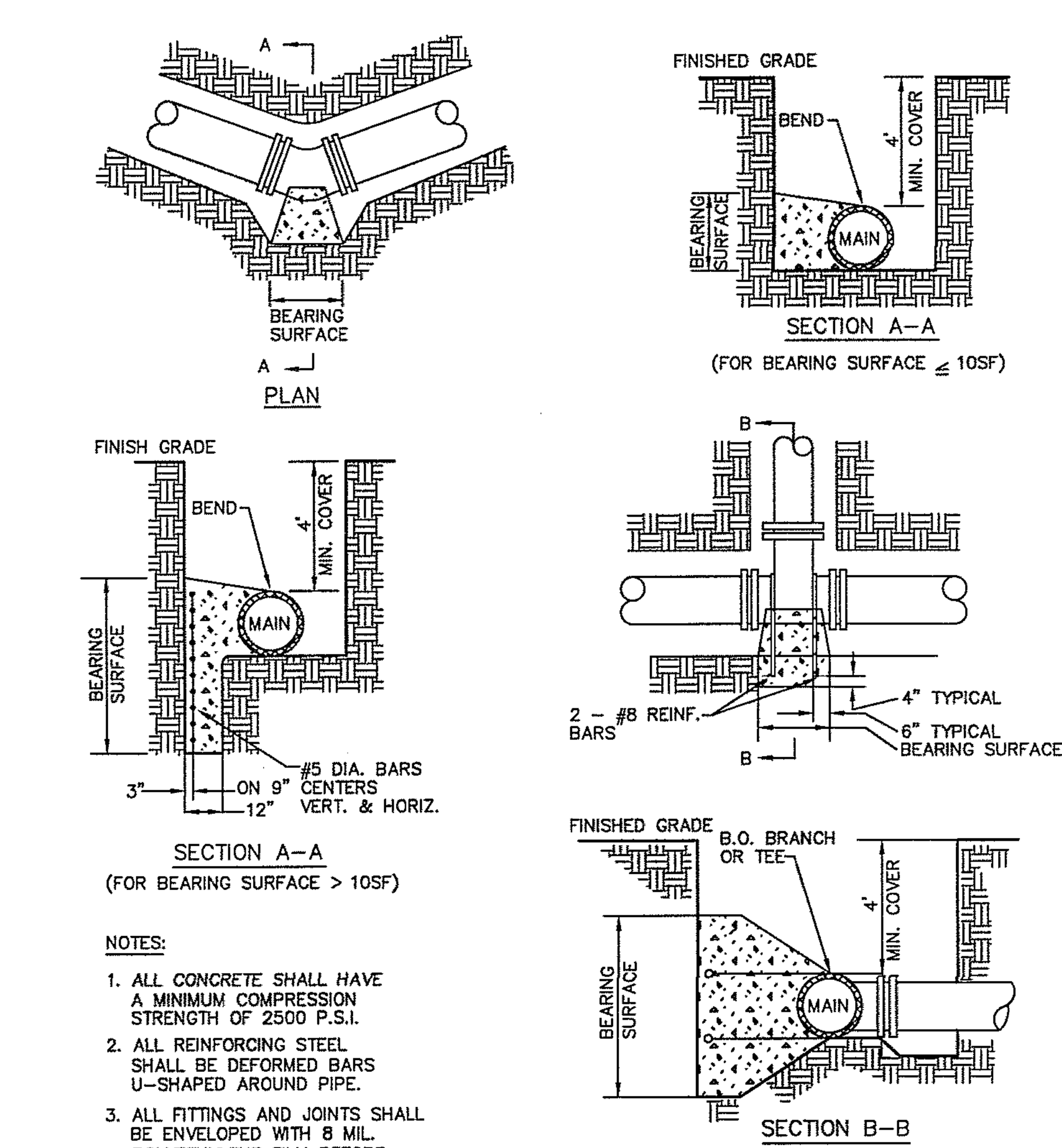

NOTES:

1. ALL CONCRETE SHALL HAVE A MINIMUM COMPRESSION STRENGTH OF 2500 P.S.I.
2. ALL REINFORCING STEEL SHALL BE DEFORMED BARS U-SHAPED AROUND PIPE.
3. ALL FITTINGS AND JOINTS SHALL BE ENVELOPED WITH 8 MIL. POLYETHYLENE FILM BEFORE PLACING CONCRETE.
4. PAINT ALL EXPOSED STEEL WITH TWO COATS OF ASTM D1187 ASPHALT EMULSION.
5. FOR THE REQUIRED BEARING SURFACE SEE STANDARD DETAIL W8.

HORIZONTAL THRUST BLOCK ORIENTATION

NTS

BEARING SURFACE AREAS
HORIZONTAL THRUST & VERTICAL DOWNWARD THRUST
150 P.S.I. WORKING PRESSURE

DEGREE OF BEND OR DEFLECTION

PIPE SIZE	3"					4"					6"					8"				
TYPE OF BEARING MATERIAL AND ALLOWABLE LOADS	D.E.	90°	45°	22.5°	11.25°	D.E.	90°	45°	22.5°	11.25°	D.E.	90°	45°	22.5°	11.25°	D.E.	90°	45°	22.5°	11.25°
SOFT CLAY (1,000#/SF)	2.8	3.9	2.1	1.1	1.0	4.1	5.8	3.1	1.6	1.0	8.4	11.9	6.4	3.3	1.6	14.5	20.5	11.1	5.6	2.8
SILT (1,500#/SF)	1.8	2.6	1.4	1.0	1.0	2.7	3.8	2.1	1.1	1.0	5.6	7.9	4.6	2.2	1.1	9.6	13.6	7.4	3.8	1.9
SANDY SILT (3,000#/SF)	1.0	1.3	1.0	1.0	1.0	1.4	1.9	1.0	1.0	1.0	2.8	4.0	2.1	1.1	1.0	4.8	6.8	3.7	1.9	1.0
SAND (4,000#/SF)	1.0	1.0	1.0	1.0	1.0	1.0	1.4	1.0	1.0	1.0	2.1	3.0	1.6	1.0	1.0	3.6	5.1	2.8	1.4	1.0
SANDY CLAY (6,000#/SF)	1.0	1.0	1.0	1.0	1.0	1.0	1.0	1.0	1.0	1.0	1.4	2.0	1.1	1.0	1.0	2.4	3.4	1.8	1.0	1.0
HARD CLAY (9,000#/SF)	1.0	1.0	1.0	1.0	1.0	1.0	1.0	1.0	1.0	1.0	1.0	1.3	1.0	1.0	1.0	1.6	2.3	1.2	1.0	1.0

PIPE SIZE	10"					12"					14"					16"				
TYPE OF BEARING MATERIAL AND ALLOWABLE LOADS	D.E.	90°	45°	22.5°	11.25°	D.E.	90°	45°	22.5°	11.25°	D.E.	90°	45°	22.5°	11.25°	D.E.	90°	45°	22.5°	11.25°
SOFT CLAY (1,000#/SF)	21.8	30.8	16.7	8.5	4.3	30.8	43.5	23.6	12.0	6.0	41.4	58.5	31.7	16.1	8.1	53.5	75.6	40.9	20.9	10.5
SILT (1,500#/SF)	14.5	20.5	11.1	5.7	2.8	20.5	29.0	15.7	8.0	4.0	27.6	39.0	21.1	10.8	5.4	35.7	50.4	27.3	13.9	7.0
SANDY SILT (3,000#/SF)	7.3	10.3	5.6	2.8	1.4	14.5	14.5	7.9	4.0	2.0	13.8	19.5	10.6	5.4	2.7	17.8	25.2	13.6	7.0	3.5
SAND (4,000#/SF)	5.4	7.7	4.2	2.1	1.1	10.9	10.9	5.9	3.0	1.5	10.3	14.6	7.9	4.0	2.0	13.4	18.9	10.2	5.2	2.6
SANDY CLAY (6,000#/SF)	3.6	5.1	2.8	1.4	1.0	5.1	7.3	3.9	2.0	1.0	6.9	9.7	5.3	2.7	1.4	8.9	12.6	6.8	3.5	1.7
HARD CLAY (9,000#/SF)	2.4	3.4	1.9	1.0	1.0	3.4	4.8	2.06	1.3	1.0	4.6	6.5	3.5	1.8	1.0	5.9	8.4	4.5	2.3	1.2

NOTE: D.E. DENOTES DEAD END OR TEE
ALL AREAS IN SQUARE FEET.

HORIZONTAL AND VERITICAL DOWNWARD THRUST BLOCK DIMENSION

NTS

"FINAL"

NO.	DATE	DESCRIPTION	BY
8	1/9/17	REVISED PHASE "D"	JAS
7	11/9/15	REVISED PHASE "B"	JAS
6	8/12/14	REV MIDDLE CREEK ROAD	RMC
5	9/6/13	REV. PER. TWP. ENG. COMMENTS	RMC
4	8/23/13	REV. PER. TWP. ENG. LETTER DATED 7/31/13	JAS
3	6/24/13	REV. PER TWP. ENG. LETTERS DATED 1/3/13, 2/7/13	JAS
2	5/6/13	REV. AS PER NPDES MINOR REVISION	JAS
1	11/30/12	REV. AS PER TWP. ENG. LETTER DATED 6/6/12	JAS

RENNINGER PROPERTY SUBDIVISION

WATER DETAILS

PREPARED FOR

GAMBONE SWAMP PIKE, L.P.

NEW HANOVER TOWNSHIP
MONTGOMERY COUNTY
PENNSYLVANIA

Chambers Associates, Inc.
Consulting Engineers and Surveyors
2962 Skippack Pike P.O. Box 678
Worcester, PA 19490-0678
484-991-8187

SCALE	DATE	JOB	DRAWING NO.
N.T.S.	4/27/12	485-084	SHEET 50 of 54
MANAGER: JPH		DRAWN BY: JAS	

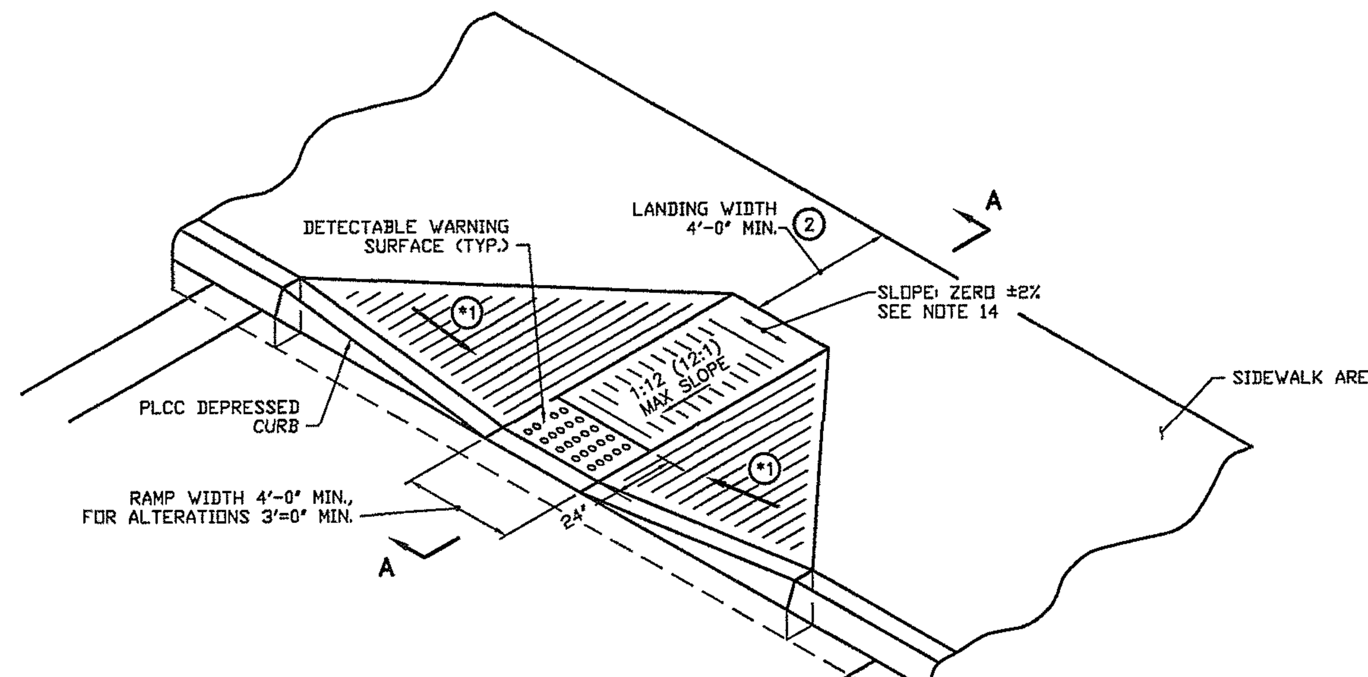

*1 SIDE FLARES 1:10 (10:1) MAX SLOPE

*2 SIDE FLARES 1:12 (12:1) MAX FOR RAMPS WITH A LANDING LESS THAN 1220 (4'-0"). FOR ALTERATIONS:

IF TECHNICALLY FEASIBLE A LANDING IS REQUIRED. HOWEVER A LANDING IS NOT REQUIRED WHERE 12:1 (12:1) SIDE FLARE SLOPES ARE PROVIDED AND RIGHT OF WAY OR OTHER STRUCTURAL FEATURES RESTRICT THE INSTALLATION OF A LANDING.

TYPE 1
CURB RAMP
NO SCALE

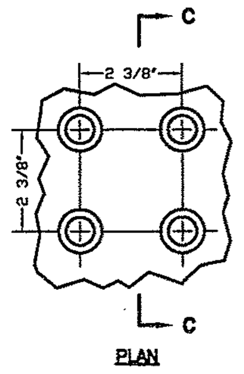

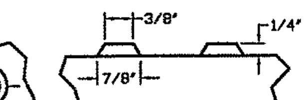

SECTION C–C

1. ALIGN DETECTABLE WARNING DOMES ON A SQUARE GRID IN THE PREDOMINANT DIRECTION OF TRAVEL TO PERMIT WHEELS TO ROLL BETWEEN THE DOMES.
2. PROVIDE DETECTABLE WARNING SURFACES THAT CONTRAST (70%) IN LIGHT REFLECTANCE WITH ADJOINING SURFACES, EITHER LIGHT-ON-DARK OR DARK-ON-LIGHT OR SAFETY YELLOW.

DETECTABLE WARNING TRUNCATED DOME DETAIL
NO SCALE

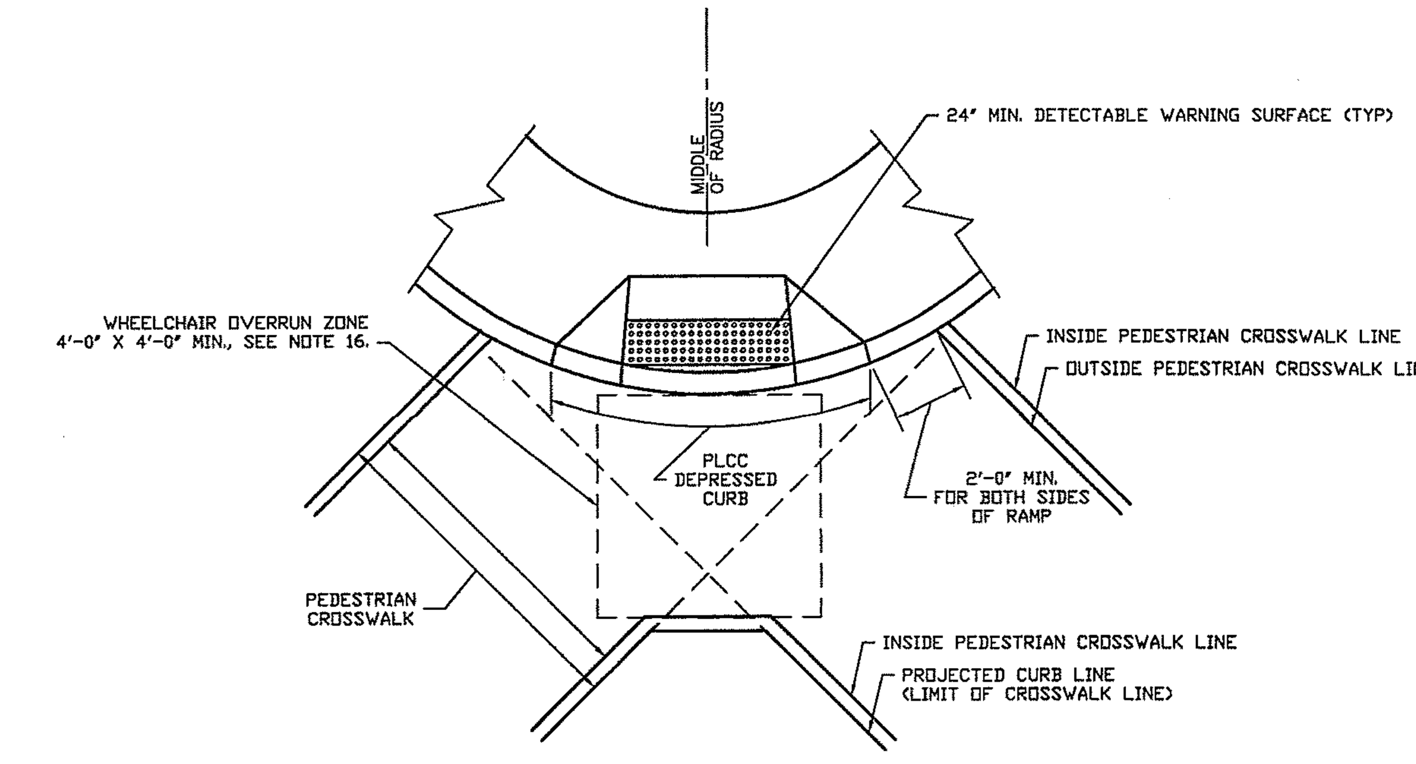

DETAIL A
WHEELCHAIR CLEAR SPACE AT CROSSWALK MARKINGS PLAN

TYPE 1 CURB RAMP NOTES

1. PROVIDE MATERIALS AND CONSTRUCTION MEETING THE REQUIREMENTS OF PUBLICATION 408, SECTIONS 350, 409, 630, 676, 694 AND 695.
2. PROVIDE EXPANSION JOINT MATERIAL 1/2 " THICK WHERE CURB RAMP ADJOINS ANY RIGID PAVEMENT, SIDEWALK OR STRUCTURE WITH THE TOP OF JOINT FILLER FLUSH WITH ADJACENT CONCRETE SURFACE.
3. IF PEDESTRIAN CROSSWALKS ARE NOT WIDE ENOUGH TO PROVIDE MINIMUM 4'-0" X 4'-0" WIDE WHEELCHAIR OVERRUN ZONE AT THE BOTTOM OF THE RAMP, POSITION CROSSWALKS AS INDICATED IN DETAIL A, WHEELCHAIR CLEAR SPACE AT CROSSWALK MARKINGS PLAN.
4. SEAL JOINTS WITH AN APPROVED SEALING MATERIAL.
5. PROVIDE SLIP RESISTANT TEXTURE ON CURB RAMP BY COARSE BROOMING TRANSVERSE TO THE SLOPE OF THE RAMP. EXTEND TEXTURE THE FULL WIDTH AND LENGTH OF THE CURB RAMP INCLUDING FLARED SIDE RAMPS.
6. MODIFY CONSTRUCTION DETAILS TO ADAPT DIMENSIONS TO EXISTING CURB *ALTERATIONS WHERE THE CURB IS LESS THAN THE STANDARD 8" HEIGHT.*
7. CURB RAMP AND SIDE FLARE LENGTHS ARE VARIABLE AND BASED ON CURB HEIGHT AND THE SIDEWALK SLOPE.
8. IT MAY BE NECESSARY TO LIMIT THE RUN OF A PARALLEL OR PERPENDICULAR RAMP IN ORDER TO AVOID CHASING GRADE INDEFINITELY. RAMP LENGTH NOT TO EXCEED 15'-0", ADJUST RAMP SLOPE AS NEEDED.
9. MEASURE AND PAY FOR DEPRESSED CURB IN ACCORDANCE WITH SECTION 630.4. WHENEVER POSSIBLE, CONSTRUCT THE TRANSITION SLOPE FROM THE CURB.
10. RAMP AND FLARE SIDES TO ADJOINING SURFACES WITH A GRADUAL ROUNDED SHAPE RATHER THAN AN ABRUPT ANGLE. ENSURE CONSTRUCTION IS WITHIN MAXIMUM SLOPE.
11. CONSTRUCT BUILT-UP CURB RAMP OF BITUMINOUS MATERIAL AS INDICATED, INCLUDING SURFACE PREPARATION AND TACK COAT, AS REQUIRED.
12. ALIGN DETECTABLE WARNING DOMES ON A SQUARE GRID IN THE PREDOMINANT DIRECTION OF PEDESTRIAN TRAVEL.
13. PROVIDE DETECTABLE WARNING SURFACES THAT CONTRAST VISUALLY WITH ADJACENT WALKWAY SURFACES, EITHER LIGHT-ON-DARK OR DARK-ON-LIGHT FOR THE FULL WIDTH OF RAMP.
14. NOWHERE SHALL THE CROSS SLOPE OF THE RAMPS ACCESSIBLE ROUTE EXCEED 2%. CONSTRUCT RAMP AND FLARE SLOPES WITH THE FLATTEST SLOPE POSSIBLE.
15. THE SLOPES INDICATED IN THE DETAILS SHOW THE MAXIMUM SLOPE ALLOWABLE. IT IS STRONGLY RECOMMENDED TO USE THE FOLLOWING SLOPES TO ALLOW FOR CONSTRUCTION TOLERANCES.
16. IF PEDESTRIAN CROSSWALKS ARE NOT WIDE ENOUGH TO PROVIDE MINIMUM 4'-0" X 4'-0" WIDE WHEELCHAIR OVERRUN ZONE AT THE BOTTOM OF THE RAMP, POSITION CROSSWALKS AS INDICATED IN DETAIL A,WHEELCHAIR CLEAR SPACE AT CROSSWALK MARKINGS PLAN..

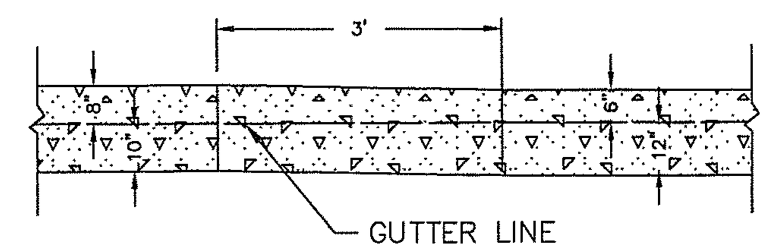

6" TO 8" CURB TRANSITION

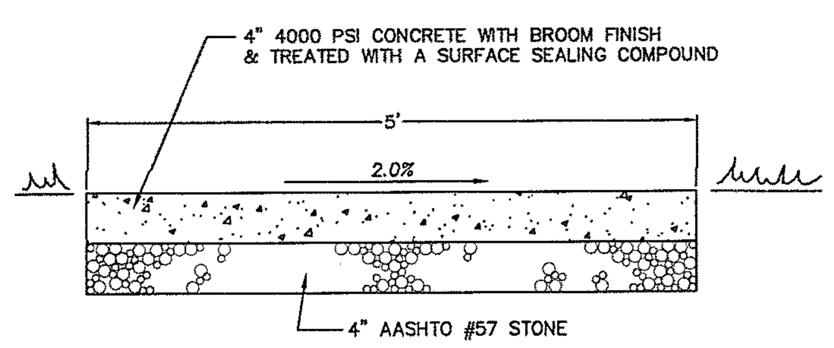

NOTE: 1. DRIVEWAY PORTIONS OF THE SIDEWALK SHALL BE 6" THICK, SHALL INCLUDE 6"x6" WELDED WIRE FABRIC, AND SHALL BE SEPARATED FROM SIDEWALK BY 1/2" EXPANSION JOINT.

2. CONCRETE TO BE 4,000 PSI MIN. CONCRETE CEMENT, WITH 6% AIR ENTRAINMENT, AND CURED WITH WHITE PIGMENT CURING COMPOUND.

1/2" BIT. EXP. JOINT AT 20' O.C.
CONSTRUCTION JOINT AT 5' O.C.

SIDEWALK DETAIL

NOTE:
A SURFACE SEALER FOR THE PREVENTION OF DAMAGE BY SALT IS TO BE APPLIED TO ALL NEW APRONS AND SIDEWALKS.

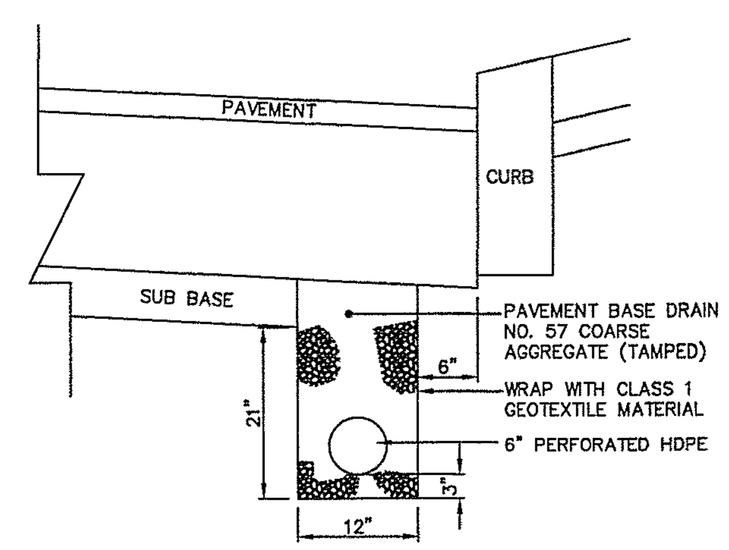

PLACEMENT AT CURB SECTION
PERFORATED PVC UNDERDRAIN DETAIL

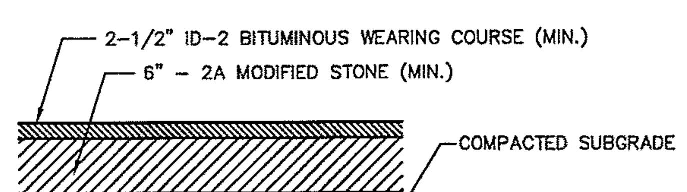

TYPICAL DRIVEWAY PAVING DETAIL

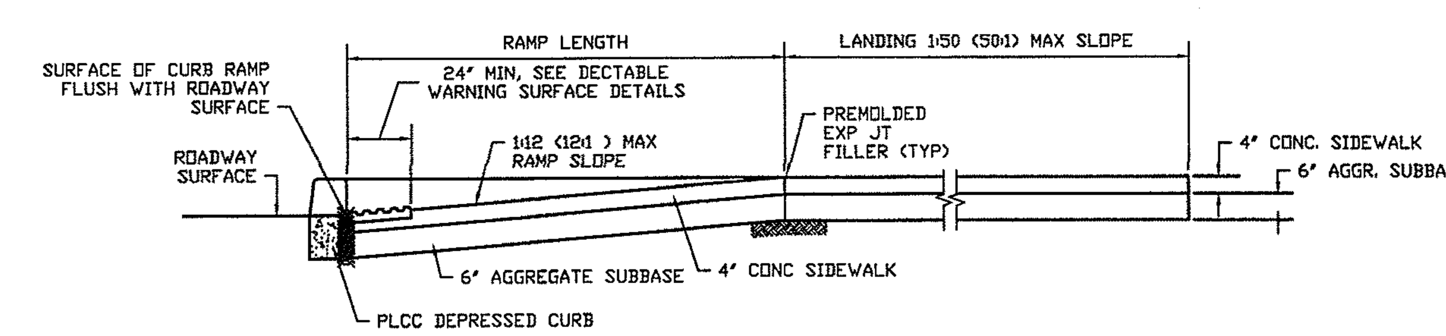

TYPE 1
SECTION A–A

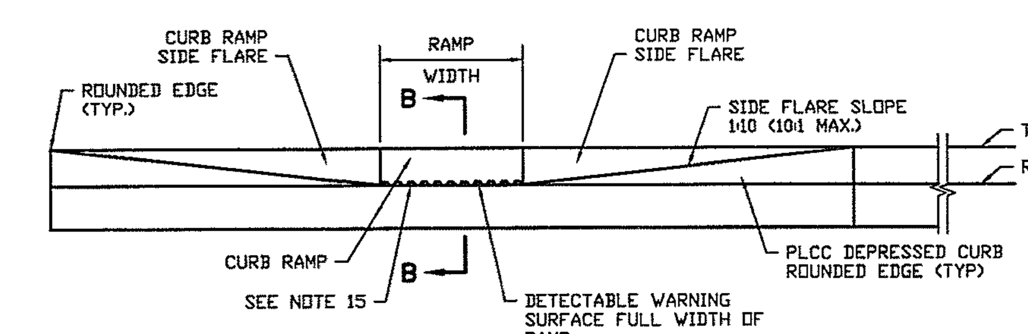

TYPE 1
ELEVATION

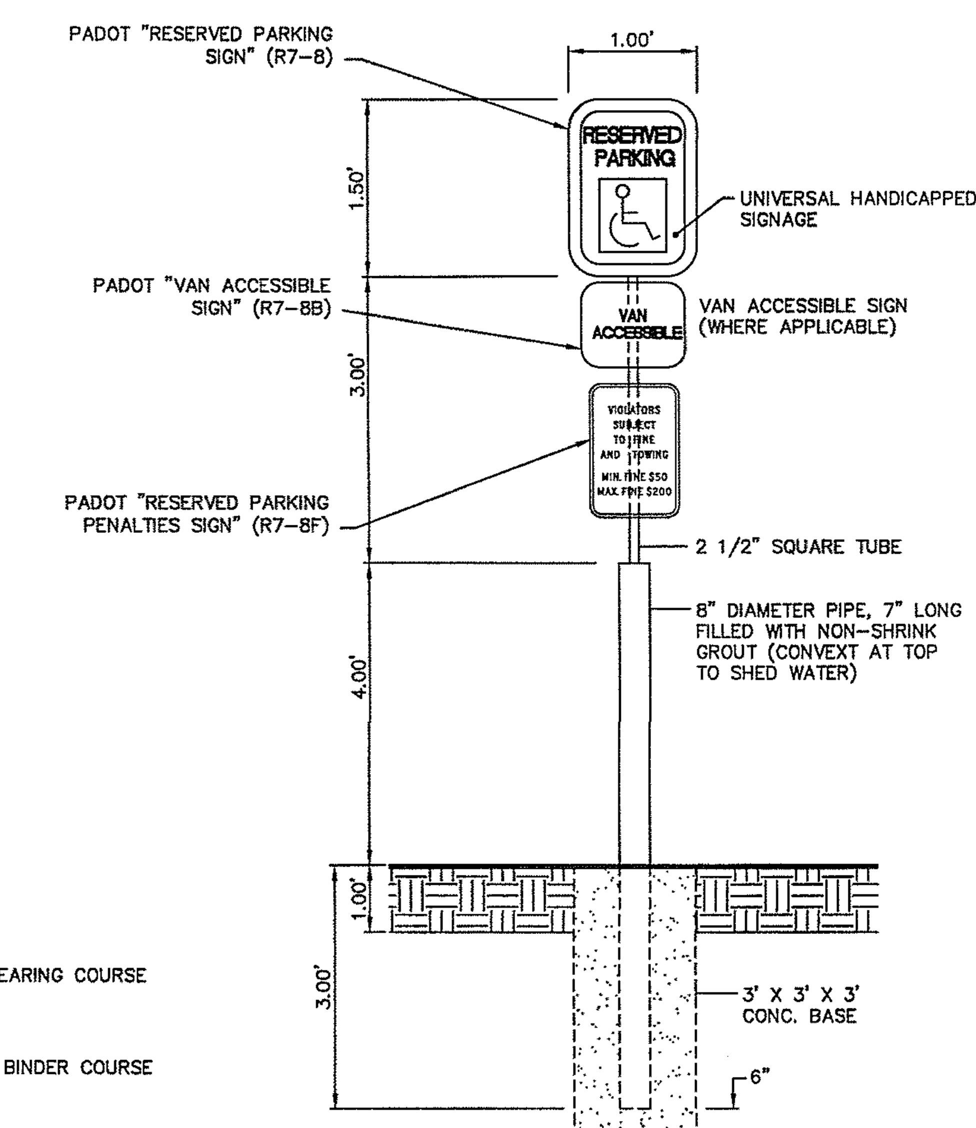

NOTE:
WHERE ADJACENT TO A LIGHT STANDARD, THE UNIVERSAL HANDICAP SIGN SHALL BE ATTACHED TO SAID STANDARD AT A MINIMUM HEIGHT OF SIX (6) FEET.

HANDICAP PARKING SIGN

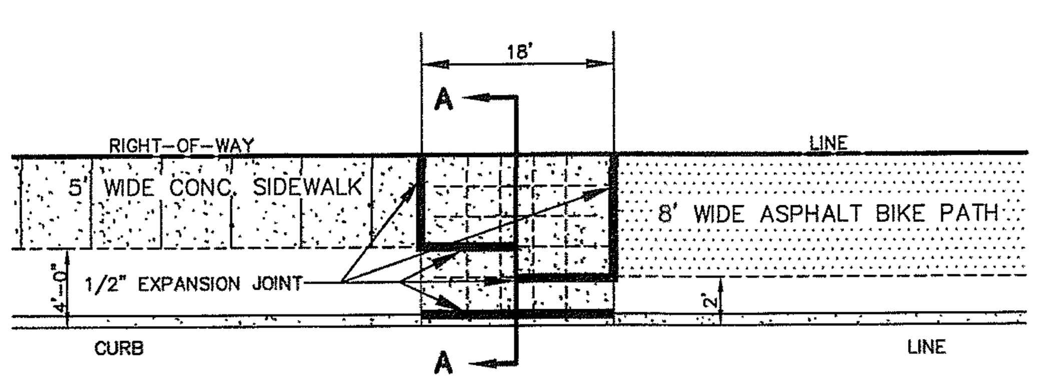

PLAN VIEW
RESIDENTIAL DEPRESSED CURB DRIVEWAY ENTRANCE

NOTE: THE DRIVEWAY APRONS SHALL BE INSTALLED WITH WELDED WIRE FABRIC. SURFACE SEALER IS TO BE APPLIED.

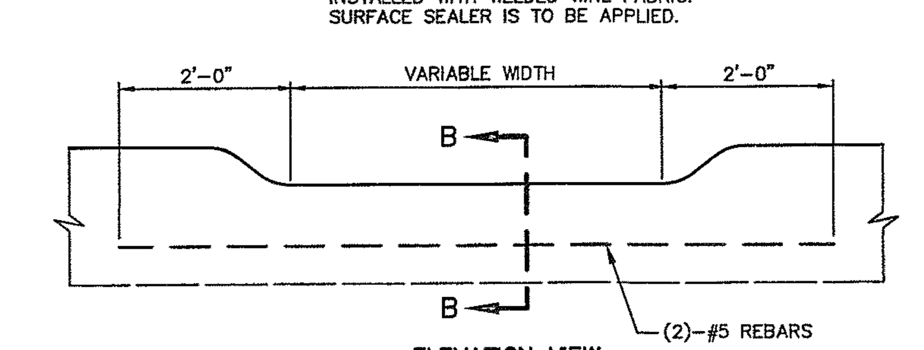

ELEVATION VIEW

NOTES

1. *PROVIDE MATERIALS AND CONSTRUCTION MEETING THE REQUIREMENTS OF PUBLICATION 408,* SECTION 630 FOR PLAIN CONCRETE CURB AND DEPRESSED CURB, SECTION 640 FOR PLAIN CONCRETE CURB AND FOR PLAIN CONCRETE CURB GUTTER.
2. SPACE CONTRACTION JOINTS IN UNIFORM LENGTHS OR SECTIONS.
3. PLACE 3/4-INCH PREMOLDED EXPANSION JOINT FILLER MATERIAL AT STRUCTURES AND AT THE END OF THE WORK DAY. CUT MATERIAL TO CONFORM TO AREA ADJACENT TO CURB OR TO CONFORM TO CROSS SECTIONAL AREA OF CURB.
4. SEE RC-50 FOR PLAIN CONCRETE CURB SLOPED TOP TREATMENT AT END OF STRUCTURES.
5. DEPRESSED CURB INFORMATION IS PER PENNDOT RC-64.

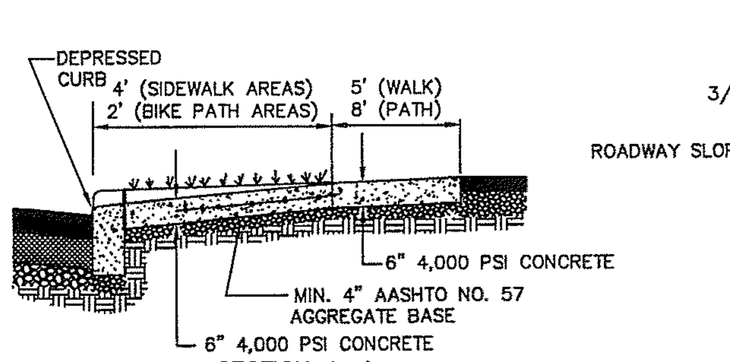

SECTION A–A
NO SCALE

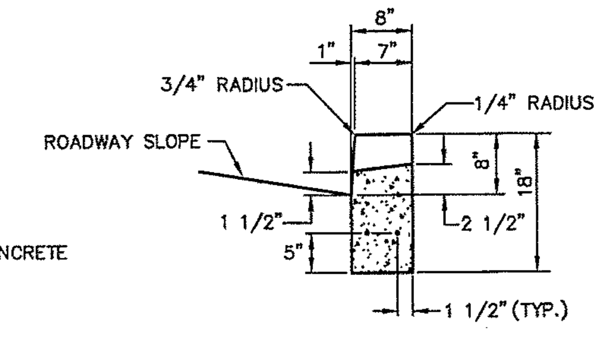

SECTION B–B

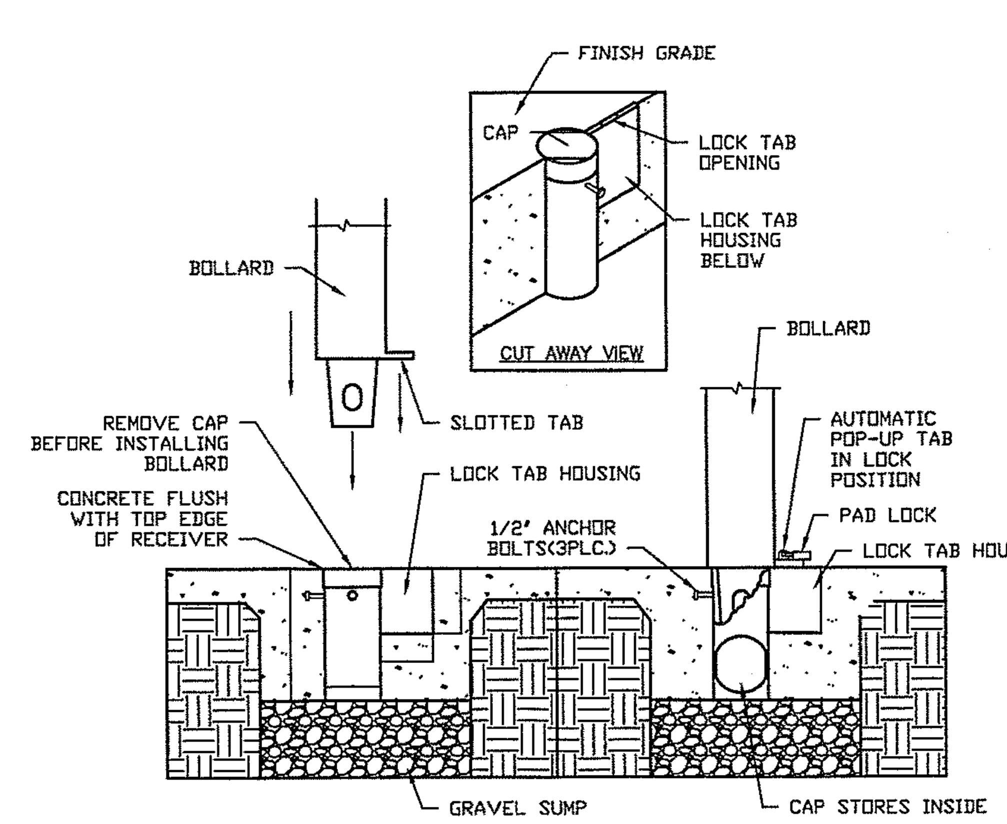

NOTES:

1. GRAVEL BASE IS SUGGESTED FOR DRAINAGE. RECEIVER IS OPEN AT THE BOTTOM.
2. CONCRETE PROFILE AND SUMP DEPTH TO BE DETERMINED BY INSTALLER BASED ON SITE CONDITIONS.
3. LOCK TAB OPENING MUST BE KEPT CLEAR, PROTECT WITH TAPE DURING CONCRETE POUR.

REMOVEABLE/LOCKABLE BOLLARD INSTALLATION
NO SCALE

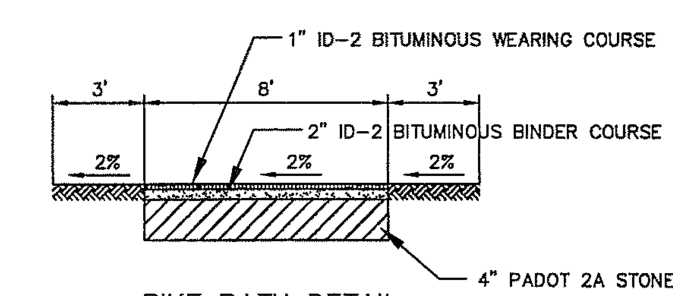

BIKE PATH DETAIL
N.T.S.

NOTE: 1. REFER TO 142.41 AND AASHTO GUIDE FOR THE DEVELOPMENT OF BICYCLE FACILITIES.
2. SEE CURB CUT RAMP FOR PHYSICALLY HANDICAPPED DETAIL FOR INTERSECTION TREATMENT WITH CURBED ROADS.

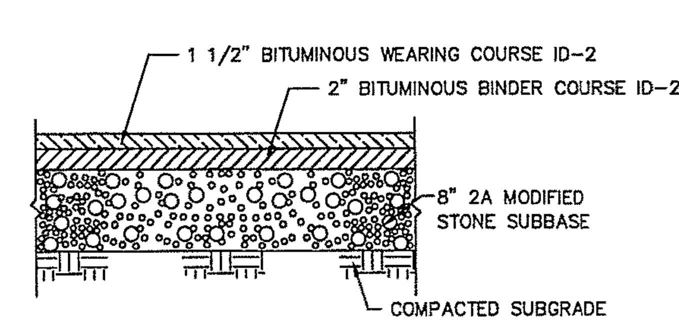

PARKING LOT PAVEMENT SECTION

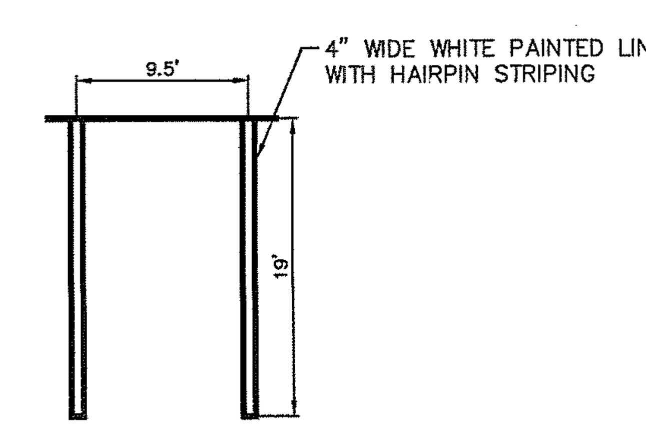

STANDARD PARKING STRIPING

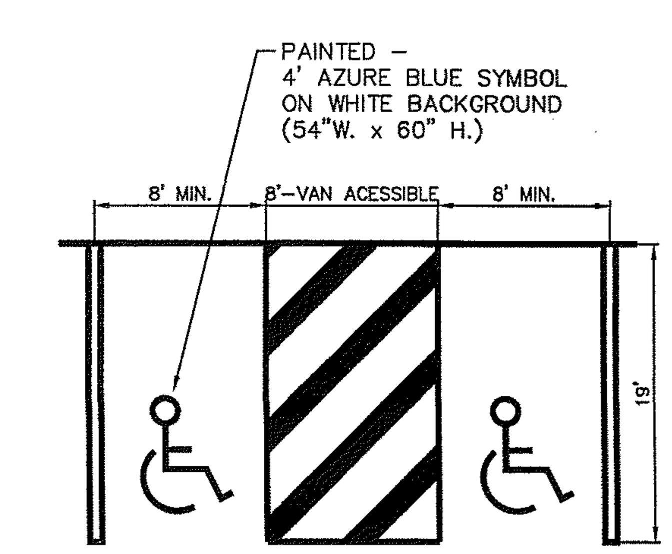

HANDICAP VAN ACCESSIBLE PARKING STRIPING

"FINAL"

NO.	DATE	DESCRIPTION	BY
8	1/9/17	REVISED PHASE "D"	JAS
7	11/9/15	REVISED PHASE "B"	JAS
6	8/12/14	REV MIDDLE CREEK ROAD	RMC
5	9/6/13	REV. PER. TWP. ENG. COMMENTS	RMC
4	8/23/13	REV. PER. TWP. ENG. LETTER DATED 7/31/13	JAS
3	6/24/13	REV. PER TWP. ENG. LETTERS DATED 1/3/13, 2/7/13	JAS
2	5/6/13	REV. AS PER NPDES MINOR REVISION	JAS
1	11/30/12	REV. AS PER TWP. ENG. LETTER DATED 6/6/12	JAS

RENNINGER PROPERTY SUBDIVISION
DETAILS

PREPARED FOR
GAMBONE SWAMP PIKE, L.P.
NEW HANOVER TOWNSHIP
MONTGOMERY COUNTY
PENNSYLVANIA

Chambers Associates, Inc.
Consulting Engineers and Surveyors
2962 Skippack Pike P.O. Box 678
Worcester, PA 19490–0678
484–991–8187

SCALE	DATE	JOB	DRAWING NO.
N.T.S.	4/27/12	485–084	SHEET 51 of 54
MANAGER: JPH		DRAWN BY: JAS	

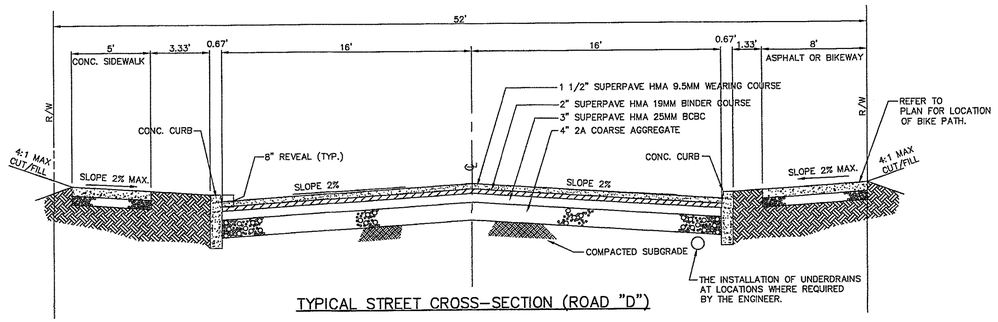

TYPICAL STREET CROSS-SECTION (ROAD "D")

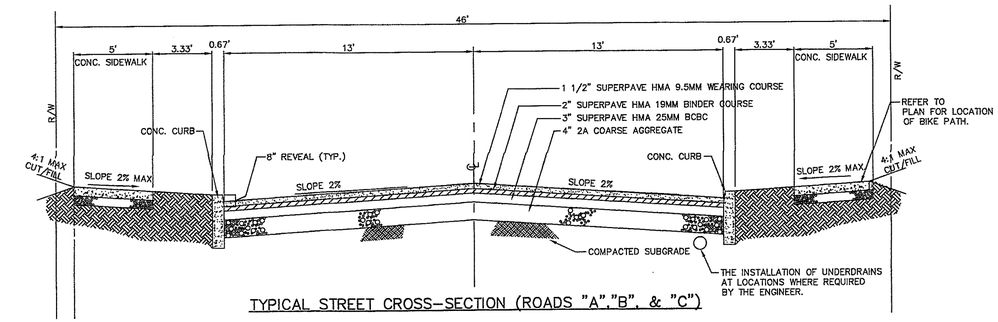

TYPICAL STREET CROSS-SECTION (ROADS "A","B", & "C")

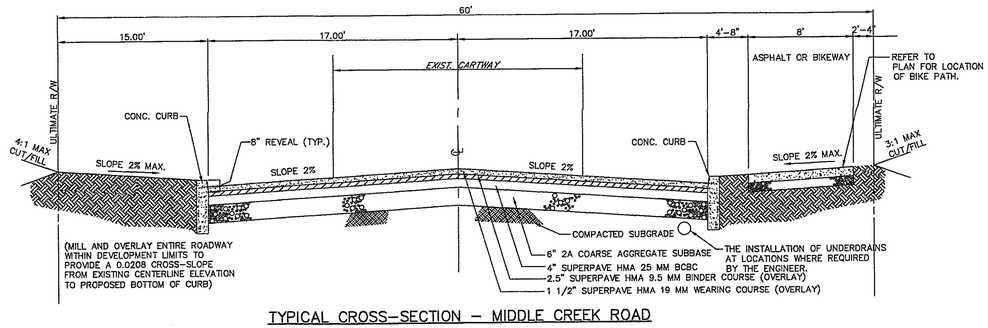

TYPICAL CROSS-SECTION - MIDDLE CREEK ROAD

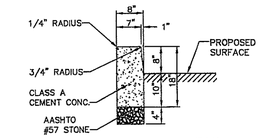

CONC. CURB DETAIL
WITHIN PUBLIC RIGHT-OF-WAY

NOTE: CONCRETE TO BE 4,000 PSI MIN. CONCRETE CEMENT, WITH 6% AIR ENTRAINMENT, AND CURED WITH WHITE PIGMENT CURING COMPOUND AND SHALL BE TIED TO INLET TOPS.

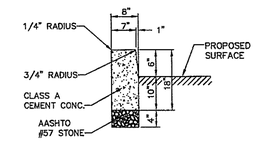

CONC. CURB DETAIL
AROUND PARKING AREAS

NOTE: CONCRETE TO BE 4,000 PSI MIN. CONCRETE CEMENT, WITH 6% AIR ENTRAINMENT, AND CURED WITH WHITE PIGMENT CURING COMPOUND AND SHALL BE TIED TO INLET TOPS.

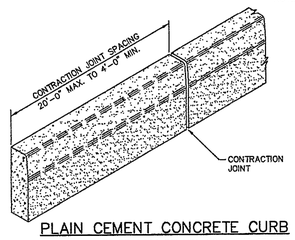

PLAIN CEMENT CONCRETE CURB

NOTE: CONCRETE TO BE 4,000 PSI MIN. CONCRETE CEMENT, WITH 6% AIR ENTRAINMENT, AND CURED WITH WHITE PIGMENT CURING COMPOUND AND SHALL BE TIED TO INLET TOPS.

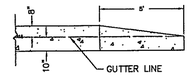

END CURB TREATMENT DETAIL

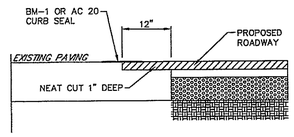

MACADAM NEAT CUT DETAIL

"FINAL"

NO.	DATE	DESCRIPTION	BY
8	1/9/17	REVISED PHASE "D"	JAS
7	11/9/15	REVISED PHASE "B"	JAS
6	8/12/14	REV MIDDLE CREEK ROAD	RMC
5	9/6/13	REV. PER. TWP. ENG. COMMENTS	RMC
4	8/23/13	REV. PER. TWP. ENG. LETTER DATED 7/31/13	JAS
3	6/24/13	REV. PER TWP. ENG. LETTERS DATED 1/3/13, 2/7/13	JAS
2	5/6/13	REV. AS PER NPDES MINOR REVISION	JAS
1	11/30/12	REV. AS PER TWP. ENG. LETTER DATED 6/6/12	JAS

RENNINGER PROPERTY SUBDIVISION

DETAILS

PREPARED FOR

GAMBONE SWAMP PIKE, L.P.

NEW HANOVER TOWNSHIP

MONTGOMERY COUNTY

PENNSYLVANIA

Chambers Associates, Inc.
Consulting Engineers and Surveyors
2962 Skippack Pike P.O. Box 678
Worcester, PA 19490-0678
484-991-8187

SCALE	DATE	JOB	DRAWING NO.
N.T.S.	4/27/12	485-084	SHEET 52 of 54
MANAGER: JPH		DRAWN BY: JAS	

L:\Planning\485084\Subdivision\plan\construction SET OF PLANS 1-9-17\STEP3-bubble\Addendum#3.dwg, 01/10/2017 11:03:30 AM, Wayne Hoffman

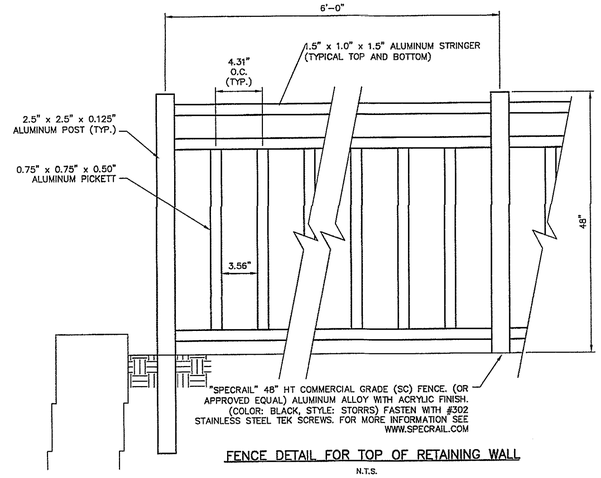

FENCE DETAIL FOR TOP OF RETAINING WALL

N.T.S.

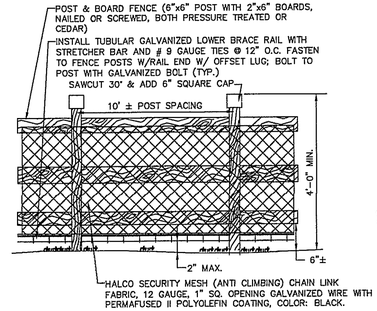

4 FT. HIGH STORMWATER BASIN AND TOT LOT POST & BOARD FENCE DETAIL

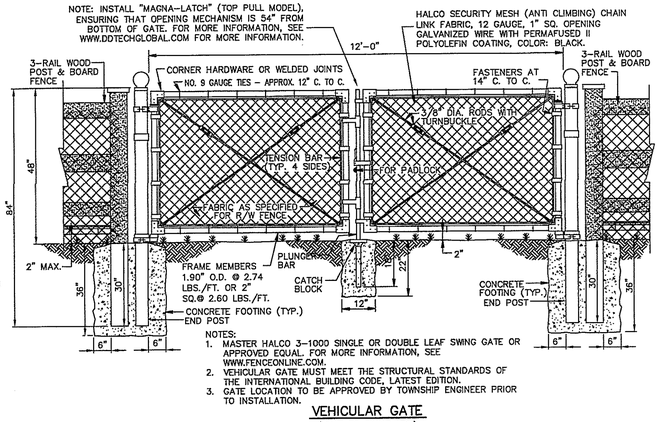

NOTES:
1. MASTER HALCO 3-1000 SINGLE OR DOUBLE LEAF SWING GATE OR APPROVED EQUAL. FOR MORE INFORMATION, SEE WWW.FENCEONLINE.COM.
2. VEHICULAR GATE MUST MEET THE STRUCTURAL STANDARDS OF THE INTERNATIONAL BUILDING CODE, LATEST EDITION.
3. GATE LOCATION TO BE APPROVED BY TOWNSHIP ENGINEER PRIOR TO INSTALLATION.

VEHICULAR GATE

(GATE TO SWING 180°)
(SELF CLOSING)

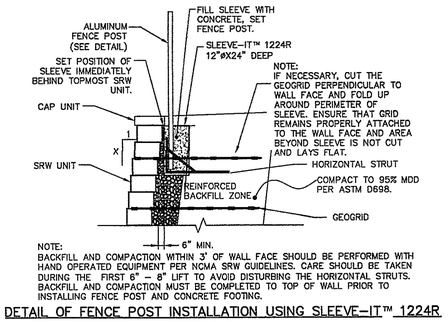

NOTE:
BACKFILL AND COMPACTION WITHIN 3' OF WALL FACE SHOULD BE PERFORMED WITH HAND OPERATED EQUIPMENT PER NCMA SRW GUIDELINES. CARE SHOULD BE TAKEN DURING THE FIRST 6" – 8" LIFT TO AVOID DISTURBING THE HORIZONTAL STRUTS. BACKFILL AND COMPACTION MUST BE COMPLETED TO TOP OF WALL PRIOR TO INSTALLING FENCE POST AND CONCRETE FOOTING.

DETAIL OF FENCE POST INSTALLATION USING SLEEVE-IT™ 1224R

N.T.S.

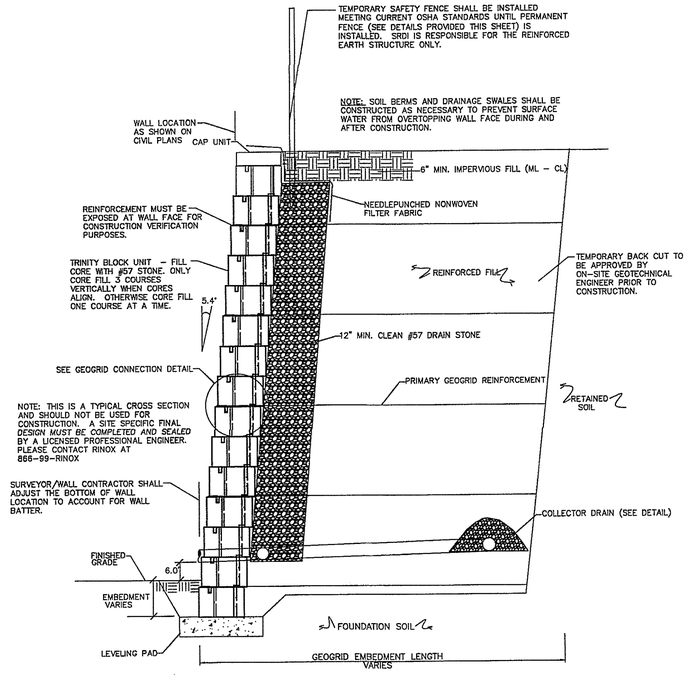

TYPICAL TRINITY CROSS-SECTION

AS MANUFACTURED BY RINOX
NOT TO SCALE

TRINITY BLOCK UNIT AS MANUFACTURED BY RINOX (610 323-6600)

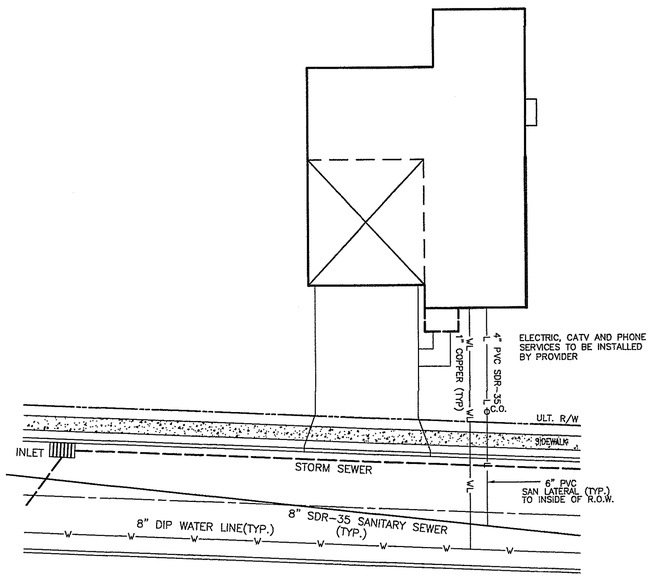

PROPOSED VILLAGE HOUSE

TYPICAL LATERAL DETAIL

N.T.S.

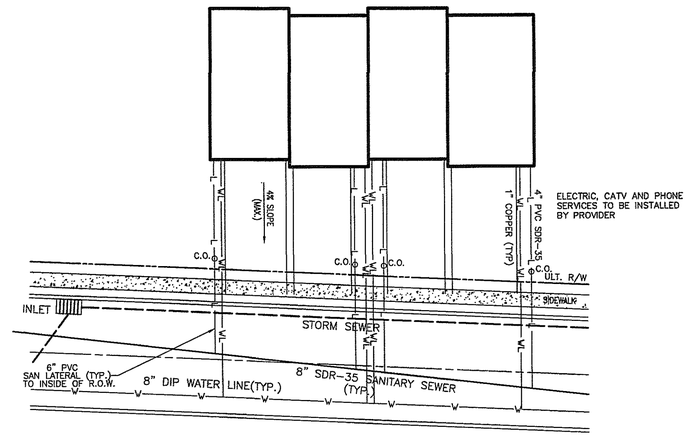

PROPOSED ATRIUM HOUSES

TYPICAL LATERAL DETAIL

N.T.S.

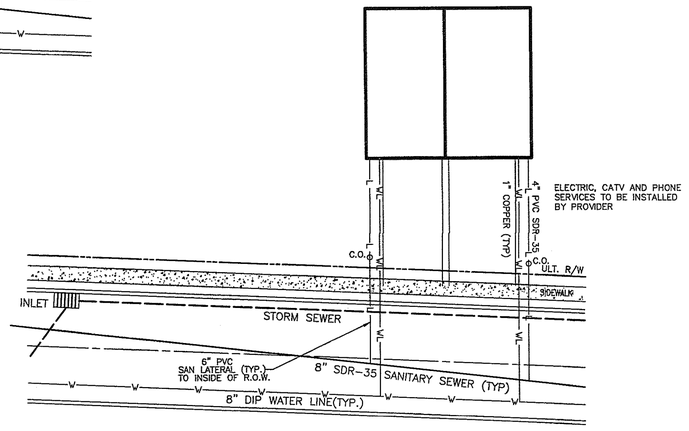

PROPOSED TWINS

TYPICAL LATERAL DETAIL

N.T.S.

"FINAL"

NO.	DATE	DESCRIPTION	BY
8	1/9/17	REVISED PHASE "D"	JAS
7	11/9/15	REVISED PHASE "B"	JAS
6	8/12/14	REV MIDDLE CREEK ROAD	RMC
5	9/6/13	REV. PER. TWP. ENG. COMMENTS	RMC
4	8/23/13	REV. PER. TWP. ENG. LETTER DATED 7/31/13	JAS
3	6/24/13	REV. PER TWP. ENG. LETTERS DATED 1/3/13, 2/7/13	JAS
2	5/6/13	REV. AS PER NPDES MINOR REVISION	JAS
1	11/30/12	REV. AS PER TWP. ENG. LETTER DATED 6/8/12	JAS

RENNINGER PROPERTY SUBDIVISION

DETAILS

PREPARED FOR

GAMBONE SWAMP PIKE, L.P.

NEW HANOVER TOWNSHIP
MONTGOMERY COUNTY
PENNSYLVANIA

Chambers Associates, Inc.
Consulting Engineers and Surveyors
2962 Skippack Pike P.O. Box 678
Worcester, PA 19490-0678
484-991-8187

SCALE	DATE	JOB	DRAWING NO.
N.T.S.	4/27/12	485-084	SHEET 53 of 54
MANAGER: JPH		DRAWN BY: JAS	

L:\Projects\485084\CS-S-A\mission\pdf\REVISION SET OF PLANS 1-9-17\DETAILS-updated-nyden-kondo.dwg, 01/10/2017 11:33:13 AM, KOCH HP OFFICEJET PRO

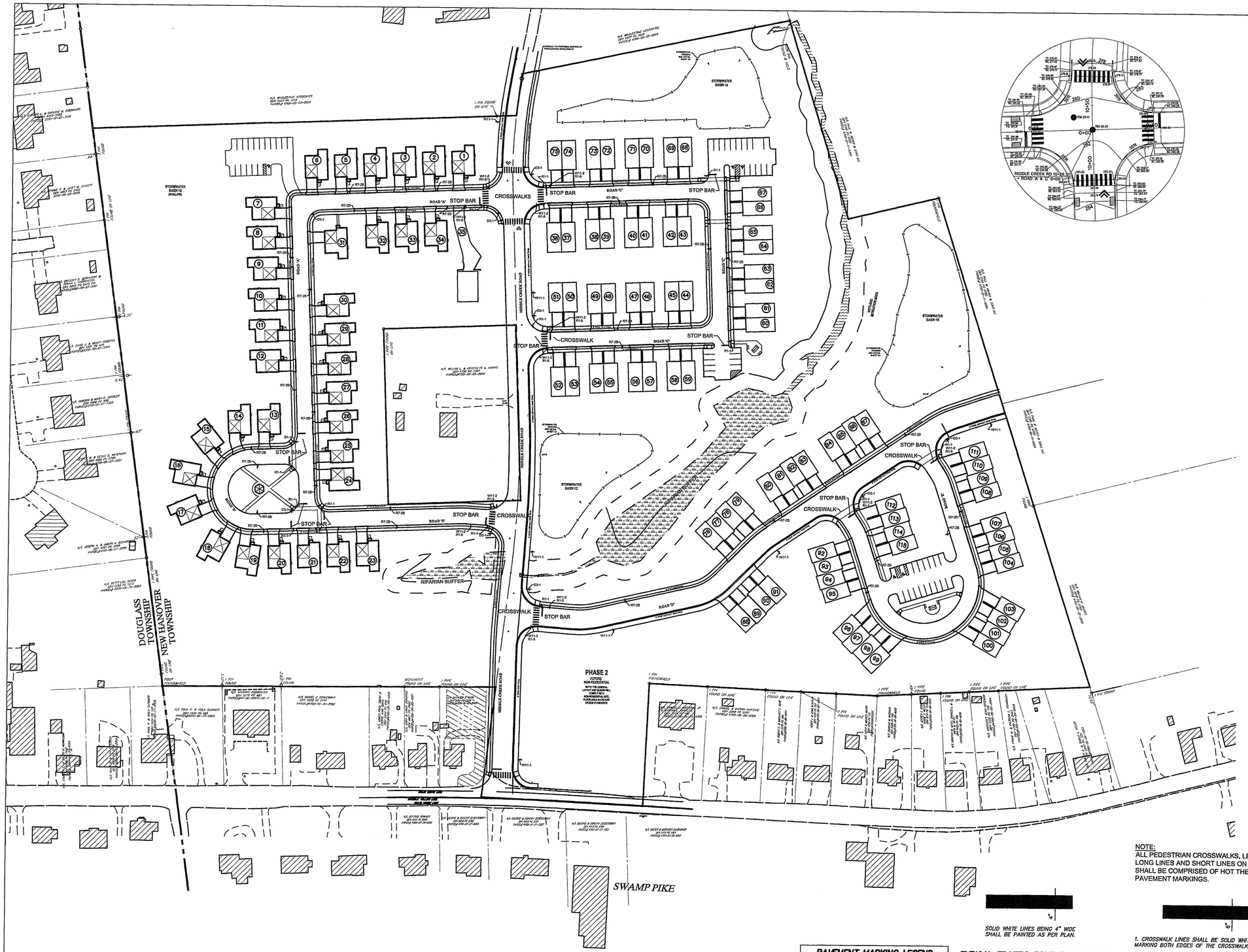

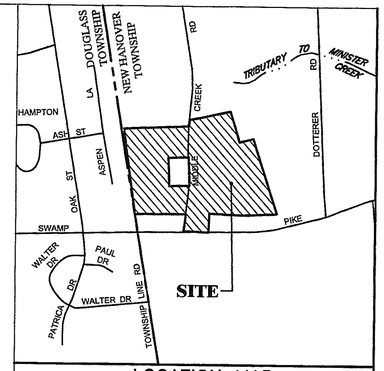

LOCATION MAP
SCALE: 1"= 800'

R1-1
30"X30"

W11A-2
30"X30"

R1-5
24"X18"

W11-1
30"X30"

R7-2B
12"X18"

A RD
B RD
C RD
D RD
D3-1

NOTE:
ALL TRAFFIC SIGNS SHOULD BE FURNISHED AND INSTALLED IN ACCORDANCE WITH PENNDOT PUB. 408/2000, SECTION 900, PENNDOT PUB. 236M, "HANDBOOK OF APPROVED SIGNS" AND M.U.T.C.D., MILLENNIUM EDITION.

PAVEMENT MARKING LEGEND

- 4" WTZP = 4" WIDE WHITE TRAFFIC ZONE PAINT (SOLID)
- 4" YTZP = 4" WIDE YELLOW TRAFFIC ZONE PAINT (SOLID)
- 4" DYTZP = 4" WIDE DOUBLE YELLOW TRAFFIC ZONE PAINT (SOLID)
- 24" WTZP = 24" WIDE WHITE TRAFFIC ZONE PAINT (STOP BAR)
- 24" YTZP = 24" WIDE YELLOW TRAFFIC ZONE PAINT
- 4" BWTZP = 4" WIDE WHITE TRAFFIC ZONE PAINT (BROKEN)

SOLID WHITE LINES BEING 4" WIDE SHALL BE PAINTED AS PER PLAN.

TYPICAL TRAFFIC ZONE PAINT DETAIL
N.T.S.

STOP BARS, SOLID WHITE LINES BEING 24" WIDE SHALL COMPLETELY TRAVERSE ALL TRAFFIC LANES ON EACH APPROACH.

TYPICAL STOP BAR DETAIL
N.T.S.

NOTE:
ALL PEDESTRIAN CROSSWALKS, LEGENDS, STOP BARS, LONG LINES AND SHORT LINES ON BITUMINOUS PAVING SHALL BE COMPRISED OF HOT THERMOPLASTIC PAVEMENT MARKINGS.

1. CROSSWALK LINES SHALL BE SOLID WHITE LINES, 6 INCHES WIDE, MARKING BOTH EDGES OF THE CROSSWALK AREA.

2. CROSSWALK LINES SHALL EXTEND FROM FACE OF CURB TO FACE OF CURB OR EDGE OF SHOULDER AS APPLICABLE. CROSSWALK LINES SHALL NOT INTERSECT.

3. LINES FORMING A CROSSWALK SHALL BE PARALLEL.

4. THE WIDTH OF CROSSWALK IS 4', UNLESS OTHERWISE SPECIFIED ON PLANS.

5. WHEN SPECIFIED ON THE PLANS, 24 INCH WIDE CONSECUTIVE WHITE RECTANGLES 8FT. LONG SHALL BE INSTALLED PARALLEL TO THE DIRECTION OF VEHICULAR TRAVEL. SPACING SHALL BE APPROXIMATELY 4FT. C-C. THEY SHALL BE LOCATED SO AS TO AVOID NORMAL WHEEL PATHS.

TYPICAL CROSSWALK DETAIL
N.T.S.

"FINAL"

80 0 80 160 240
GRAPHIC SCALE

NO.	DATE	DESCRIPTION	BY
8	1/9/17	REVISED PHASE "D"	JAS
7	11/9/15	REVISED PHASE "B"	JAS
6	8/12/14	REV MIDDLE CREEK ROAD	RMC
5	9/6/13	REV. PER TWP. ENG. COMENTS	RMC
4	8/23/13	REV. PER TWP. ENG. LETTER DATED 7/31/13	JAS
3	6/24/13	REV. PER TWP. ENG. LETTERS DATED 1/3/13, 2/7/13	JAS
2	5/6/13	REV. AS PER NPDES MINOR REVISION	JAS
1	11/30/12	REV. AS PER TWP. ENG. LETTER DATED 6/6/12	JAS

RENNINGER PROPERTY SUBDIVISION

SIGNAGE AND STRIPING PLAN

PREPARED FOR

GAMBONE SWAMP PIKE, L.P.

NEW HANOVER TOWNSHIP
MONTGOMERY COUNTY
PENNSYLVANIA

Chambers Associates, Inc.
Consulting Engineers and Surveyors
2962 Skippack Pike P.O. Box 678
Worcester, PA 19490-0678
484-991-8187

SCALE	DATE	JOB	DRAWING NO.
1"=80'	4-27-12	485-084	SHEET 54 of 54
MANAGER: JPH			DRAWN BY: JAS